Round cylinders DSNU

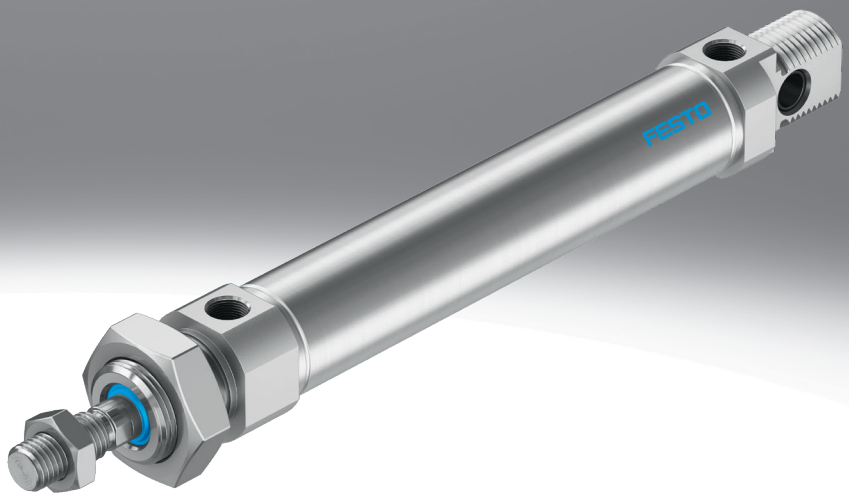

Key features

At a glance

DSNU-8 ... 63

- Stainless steel piston rod
- Good running performance and long service life
- Piston rod with male and female thread
- Extensive range of accessories makes it possible to install the cylinder virtually anywhere

DSNU-8 ... 25

- The basic versions conform to ISO 6432, variants are based on these standards

Wide choice of variants

DSNU

- Piston Ø 8 ... 63 mm
- Cylinder barrel made of stainless steel
- Bearing and end caps made of wrought aluminium alloy

DSNU-...-MA

- Piston Ø 8 ... 63 mm
- Cylinder barrel made of stainless steel
- Bearing cap with threaded flange
- Short end cap with axial supply port

DSNU-...-MQ

- Piston Ø 8 ... 63 mm
- Cylinder barrel made of stainless steel
- Bearing cap with threaded flange
- Short end cap with lateral supply port

DSNU-...-MH

- Piston Ø 8 ... 63 mm
- Cylinder barrel made of stainless steel
- Direct mounting on bearing cap
- Short end cap with lateral supply port

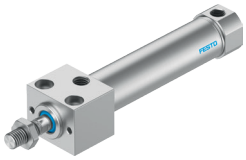

DSNU-...-KP

- Piston Ø 8 ... 63 mm
- Cylinder barrel made of stainless steel
- With clamping unit

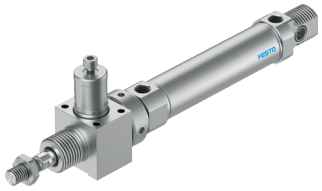

DSNU-...-Q

- Piston Ø 12 ... 63 mm
- Cylinder barrel made of stainless steel
- With square piston rod

DSNU-...-KE

- Piston Ø 8 ... 63 mm
- Through piston rod with stroke adjustment
- Setting range of the advanced end position

Cushioning types

	Cushioning P	Cushioning PPS	Cushioning PPV
Operating mode	• The drive is fitted with polymer elastic end-position cushioning	• The drive is fitted with self-adjusting end-position cushioning	• The drive is fitted with adjustable end-position cushioning
Application	• Small loads • Low speeds • Low impact energies	• Small to medium loads • Low to medium speeds • Medium impact energies	• Medium to large loads • High speeds • High impact energies
Advantages	• No adjustment required • Saves time	• No adjustment required • Saves time • Powerful	• Very powerful

Key features

Variants from the modular product system

Symbol	Key features	Description
	S2 Through piston rod	For working at both ends with the same force in the forward and return stroke, for attaching external stops
	KE Stroke adjustment, advancing	Through piston rod with adjustment component mounted on one side. For limiting the extended end position and to set a precise position.
	S6 Heat-resistant seals	Temperature resistance up to max. 120°C
	S10 Constant motion (slow speed) at low piston speeds	• Break-away pressure: very low • Dynamic response: suitable for very slow, constant and stick-slip-free movements Application example: slow, constant feed motion
	L Low friction	• Break-away pressure: low • Dynamic response: suitable for very fast movements, especially at low operating pressures Application example: very dynamic movements with no standstill
	...K2 Extended male piston rod thread	–
	K3 Female piston rod thread	–
	...K5 – Special piston rod thread	Metric standard thread to ISO
	...K6 – Shortened male piston rod thread	–
	...K8 – Extended piston rod	–
	R3 High corrosion protection	All external cylinder surfaces comply with corrosion resistance class CRC 3 to Festo standard 940070. The piston rod is made from corrosion- and acid-resistant steel
	R8 Dust protection (wiper) (32 ... 63 mm)	The cylinder has a hard-chrome-plated piston rod and a hard wiper, which protects against dry, dusty media
	A1 Scraper variant (12 ... 63 mm)	Increased chemical resistance: For longer service life, e.g. when using cooling lubricants.
	A6 Metal wiper (32 ... 63 mm)	The cylinder has a hard-chrome-plated piston rod and metal wiper, which scrapes off hard particles (e.g. welding spatter) that stick to the piston rod. For use in welding systems, for example
	F1A Recommended for production plants for manufacturing lithium-ion batteries	Suitable for battery production with reduced Cu/Zn/Ni values (F1a)

Longer service life with bellows kit DADB

The bellows protects the piston rod, the seal and the bearing from the effects of a wide range of media, which has a positive impact on the service life of these components.

The bellows kit is a leak-free system. To prevent unwanted media from being drawn in, the supply and exhaust air for the kit must be ducted via a pressure compensation hole in the connection part [1].

The kit protects the piston rod, seal and bearing against a wide variety of media, for example:

- Dust
- Chippings
- Oil
- Grease
- Fuel

Peripherals overview

DSNU-...

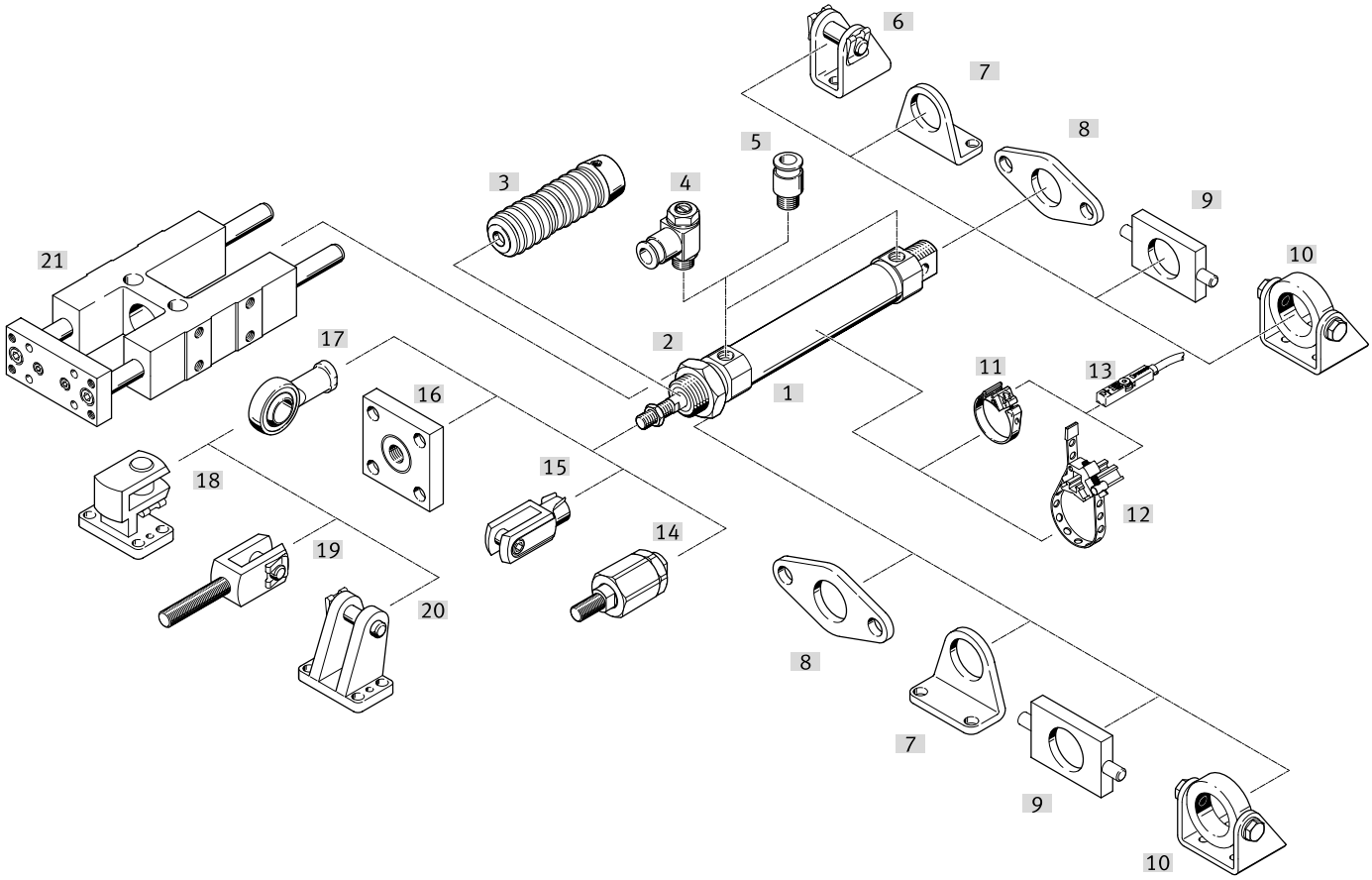

Peripherals overview

Mounting attachments and accessories		Piston ⌀	DSNU					DSNU-Q	→ Page/Internet
				MA	MQ	MH	KP		
[1]	Round cylinder DSNU								
[2]	Hex nut MSK	16 … 25	■	■	■	■	■	■	64
[3]	Bellows kit2) DADB	12 … 63	■	■	■	–	–	–	66
[4]	One-way flow control valve GRLA/GRLZ	8 … 63	■	■	■	■	■	■	75
[5]	Push-in fitting QS	8 … 63	■	■	■	■	■	■	qs
[6]	Clevis foot LBN/CRLBN	8 … 63	■	–	–	–	■	■	63
[7]	Foot mounting HBN/CRHBN/CRH	8 … 63	■	■	■	–	■	■	58
[8]	Flange mounting FBN/CRFBN/CRFV	8 … 63	■	■	■	–	■	■	60
[9]	Swivel mounting1) WBN	8 … 63	■	■	■	–	■	■	62
[10]	Swivel mounting1) SBN	20 … 63	■	■	■	–	■ ⌀ 20 … 50	■	62
[11]	Mounting kit SMBR/DASP-C1	8 … 63	■	■	■	■	■	■	72
[12]	Mounting kit SMBR-…-S6	8 … 63	■	■	■	■	■	■	73
[13]	Proximity switch SMT/CRSMT/SDBT	8 … 63	■	■	■	■	■	■	72
	Position transmitter SDAS/SDAT/SMAT	8 … 63	■	■	■	■	■	■	74
[14]	Self-aligning rod coupler FK/CRFK/DARP	8 … 63	■	■	■	■	■	■	64
[15]	Rod clevis SG/CRSG	8 … 63	■	■	■	■	■	■	64
[16]	Coupling piece KSG/KSZ	12 … 63	■	■	■	■	■	■	64
[17]	Rod eye SGS/CRSGS	8 … 63	■	■	■	■	■	■	64
[18]	Right-angle clevis foot LQG	32 … 63	■	■	■	■	■	■	63
[19]	Rod clevis SGA	32 … 63	■	■	■	■	■	■	64
[20]	Clevis foot LBG	32 … 63	■	■	■	■	■	■	65
[21]	Guide unit FEN	8 … 25	■	■	■	–	–	–	65

Note

1) Cannot be used on the bearing cap in combination with protective bellows kit DADB.

2) The bellows kit protects the cylinder (piston rod, seal and bearings) against a wide range of media and thus prevents premature wear. It can only be used in combination with an extended piston rod (K8)

Type codes

DSNU-...

001	Series	
DSNU	Round cylinder, double-acting, based on ISO 6432	

002	Piston diameter [mm]	
8	8	
10	10	
12	12	
16	16	
20	20	
25	25	
32	32	
40	40	
50	50	
63	63	

003	Stroke range [mm]	
...	1 ... 500	

004	Cushioning	
P	Elastic cushioning rings/plates on both sides	
PPS	Pneumatic cushioning, self-adjusting at both ends	
PPV	Pneumatic cushioning, adjustable at both ends	

005	Position sensing	
A	For proximity sensor	

006	Special material properties	
	None	
F1A	Recommended for production plants for manufacturing lithi-um-ion batteries, F1A	

007	Cylinder end cap	
	Standard	
MA	Axial air connection, end cap	
MH	Direct mounting, bearing cap	
MQ	Transverse supply port, end cap	

008	Protection against rotation	
Q	Square piston rod	
	None	

009	Piston rod type	
	At one end	
S2	Through piston rod	

010	Stroke adjustment	
	Without	
15KE	15 mm, advancing	
25KE	25 mm, advancing	
50KE	50 mm, advancing	

011	Piston rod thread extension	
	None	
...K2	1 ... 70 mm	

012	K6 - Shortened male piston rod thread	
	None	
K6	1 ... 10 mm	

013	Piston rod thread type	
	Male thread	
K3	Female thread	

014	Custom thread	
“M10”K5	M10	
“M12”K5	M12	
“M16”K5	M16	

015	Piston rod extension	
	None	
...K8	1 ... 500 mm	

016	Clamping unit	
	None	
KP	attached	

017	Temperature range	
	Standard	
S6	Heat-resistant seals max. 120 °C	

018	Constant motion	
	Standard	
S10	Uniform, slow movement	

019	Running characteristic	
	None	
L	Low friction	

020	Corrosion protection	
	Standard	
R3	High corrosion protection	

021	Scraper variant	
	Standard	
A1	Increased chemical resistance (FKM seal)	
A6	Metal scraper	
R8	Dust protection	

022	EX certification EU	
	None	
EX4	II 2GD	

Datasheet

P cushioning

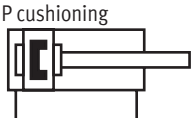

PPV cushioning

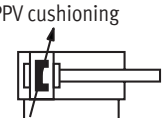

PPS cushioning

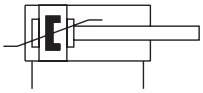

- Ø - Diameter
  8 ... 25 mm
  ISO 6432

- Ø - Diameter
  32 ... 63 mm

- l - Stroke length
  1 ... 500 mm,
  longer strokes on request

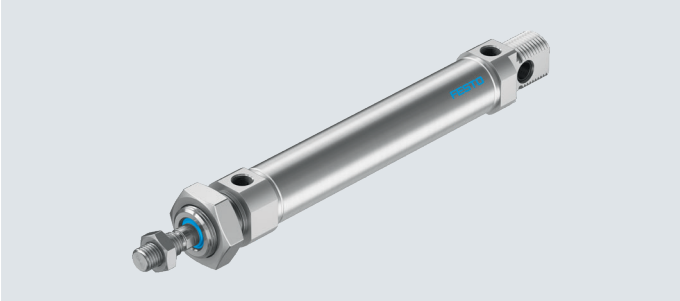

General technical data Piston Ø		8	10	12	16	20	25	32	40	50	63
Conforms to standard		ISO 6432						–			
Pneumatic connection		M5	M5	M5	M5	G1/8	G1/8	G1/8	G1/4	G1/4	G3/8
Piston rod thread		M4	M4	M6	M6	M8	M10x1.25	M10x1.25	M12x1.25	M16x1.5	M16x1.5
Stroke1)	[mm]	1 ... 100		1 ... 200		1 ... 320	1 ... 500				
Design		Piston/piston rod/cylinder barrel									
Cushioning											
DSNU-...-P		Elastic cushioning rings/plates at both ends									
DSNU-...-PPV		–		Cushioning, adjustable at both ends							
DSNU-...-PPS		–			Cushioning, self-adjusting at both ends						
Cushioning length											
DSNU-...-PPV	[mm]	–		9	12	15	17	14	18	20	21
DSNU-...-PPS	[mm]	–			12	15	17	14	18	20	21
Position sensing		Via proximity switch									
Type of mounting		Direct mounting (variant MH only)									
		With accessories									
Mounting position		Any									

1) Cylinders with position sensing require a minimum stroke of 10 mm to ensure reliable sensing.
Longer strokes on request.

Datasheet

Operating and environmental conditions											
Piston Ø		8	10	12	16	20	25	32	40	50	63
Operating medium		Compressed air to ISO 8573-1:2010 [7:4:4]									
Note on the operating/pilot medium		Lubricated operation possible (in which case lubricated operation will always be required)									
Operating pressure[1]											
DSNU-...	[MPa]	0.15 ... 1[3]			0.1 ... 1						
	[bar]	1.5 ... 10[3]			1 ... 10						
DSNU-...-S10	[MPa]	–		0.05 ... 1	0.03 ... 1			0.02 ... 1			
	[bar]	–		0.5 ... 10	0.3 ... 10			0.2 ... 10			
DSNU-...-L[2]	[MPa]	0.06 ... 1			0.05 ... 1		0.04 ... 1		0.02 ... 1		
	[bar]	0.6 ... 10			0.5 ... 10		0.4 ... 10		0.2 ... 10		
DSNU-...-A6	[MPa]	–						0.2 ... 1			
	[bar]	–						2 ... 10			
Ambient temperature4)											
DSNU-...	[°C]	–20 ... +80									
DSNU-...-S6	[°C]	0 ... +120									
DSNU-...-S10/L	[°C]	+5 ... +80									
DSNU-...-R3	[°C]	–20 ... +80									
DSNU-...-A1	[°C]	0 ... +80									
DSNU-...-S6-A6	[°C]	–						0 ... +120			
Corrosion resistance class CRC[5]											
DSNU-...		2 - Moderate corrosion stress									
DSNU-...-R3		3 - High corrosion stress									
DSNU-...-F1A		0 - no corrosion stress									
DSNU-...-P/PPV		See certificate						–			

1) With variant S2 (through piston rod) or variant KE (stroke adjustment), the minimum operating pressure may increase slightly after an idle period of > 24 hours.
2) Values apply only for strokes ≤ 500 mm and after 10 double strokes. In combination with cushioning PPV/PPS, the specifications only apply outside the cushioning range.
3) For DSNU-12-... PPV (pneumatic cushioning, adjustable at both ends): 0.2 ... 1 MPa (2 ... 10 bar)
4) Note operating range of proximity switches.
5) More information www.festo.com/x/topic/crc

ATEX[1]	
ATEX category for gas	II 2G
Type of ignition protection for gas	Ex h IIC T4 Gb
ATEX category for dust	II 2D
Type of (ignition) protection for dust	Ex h IIIC T120°C Db
Explosion-proof ambient temperature	–20 °C <= Ta <= +60 °C
CE marking (see declaration of conformity)	To EU Explosion Protection Directive (ATEX)
UKCA marking (see declaration of conformity)	To UK explosion regulations
Explosion protection certification outside the EU	EPL Db (GB)
	EPL Gb (GB)

1) Note the ATEX certification of the accessories.

Weight [g]											
Piston Ø		8	10	12	16	20	25	32	40	50	63
DSNU-...											
Product weight with 0 mm stroke		34.6	37.3	75	89.9	186.8	238	370.5	661	1087	1445
Additional weight per 10 mm stroke		2.4	2.7	4	4.6	7.2	11	15.5	24	40	44
Moving mass with 0 mm stroke		7.5	8.5	18.5	23	44	71	121	230	413	459
Moving mass per 10 mm stroke		1	1	2	2	4	6	9	16	25	25
DSNU-...-S2											
Moving mass with 0 mm stroke		12	12.5	30	34.5	70	113	182	363	638	701
Moving mass per 10 mm stroke		2	2	4	4	8	12	18	32	50	50
DSNU-...-KE											
Moving mass with 0 mm stroke	[15KE]	17	17.5	–	–	–	–	–	–	–	–
	[25KE]	–	–	46	50.5	99	142	251	469	839	902
	[50KE]	–	–	–	–	–	–	–	491	918	981
Moving mass per 10 mm stroke		2	2	4	4	8	12	18	32	50	50

Datasheet

Speed [mm/s]1)							
Piston Ø	16	20	25	32	40	50	63
Speed with stick-slip-free operation, S10 horizontal, without load, at 0.6 MPa (6 bar)	10 ... 100			8 ... 100			5 ... 100

1) Measurements of less than 1 mm/s were not conducted

Forces [N] and impact energy [J]										
Piston Ø	8	10	12	16	20	25	32	40	50	63
Theoretical force at 0.6 MPa (6 bar), advancing	30	47	68	121	189	295	483	753	1178	1870
Theoretical force at 0.6 MPa (6 bar), retracting	23	40	51	104	158	247	415	633	990	1682
Impact energy in the end positions for P cushioning1)										
DSNU-...	0.03	0.05	0.07	0.15	0.2	0.3	0.4	0.7	1	1.3
DSNU-...-S6	0.015	0.025	0.035	0.075	0.1	0.15	0.2	0.35	0.5	0.65
DSNU-...-KE	0.025	0.025	0.055	0.12	0.16	0.24	0.32	0.56	0.8	1

1) The values are reduced by approx. 50% at an ambient temperature of 80 °C

Permissible impact velocity:

$$V = \sqrt{\frac{2 \times E}{m_1 + m_2}}$$

Maximum permissible mass:

$$m_2 = \frac{2 \times E}{v^2} - m_1$$

V	Perm. impact velocity
E	Max. impact energy
m1	Moving mass (drive)
m2	Moving effective load

Average piston speed v as a function of effective load m in combination with cushioning PPS

Piston Ø 16

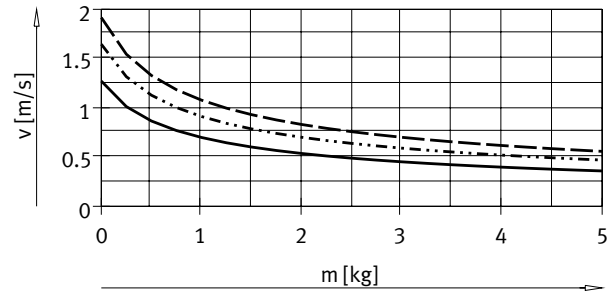

DSNU-16-50
DSNU-16-100
DSNU-16-200

Piston Ø 20

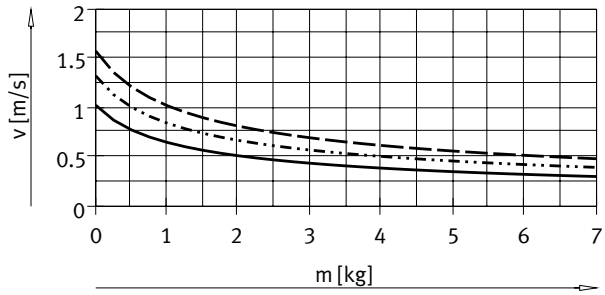

DSNU-20-50
DSNU-20-100
DSNU-20-200

Piston Ø 25

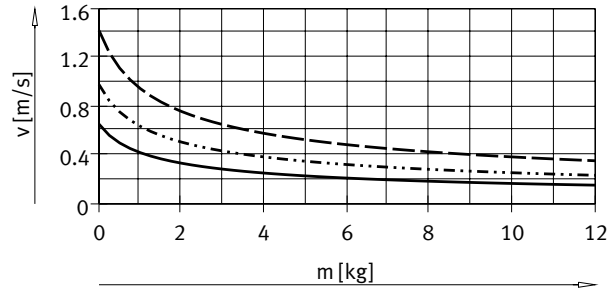

DSNU-25-50
DSNU-25-100
DSNU-25-200

Piston Ø 32

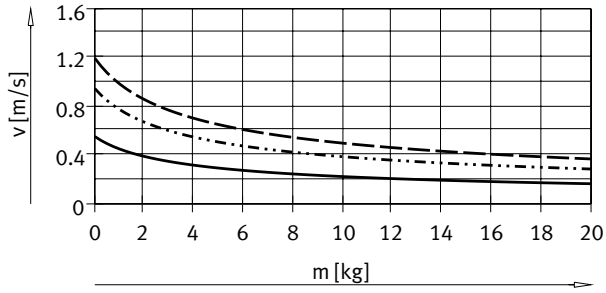

DSNU-32-50
DSNU-32-100
DSNU-32-200

Datasheet

Average piston speed v as a function of effective load m in combination with cushioning PPS

Piston Ø 40

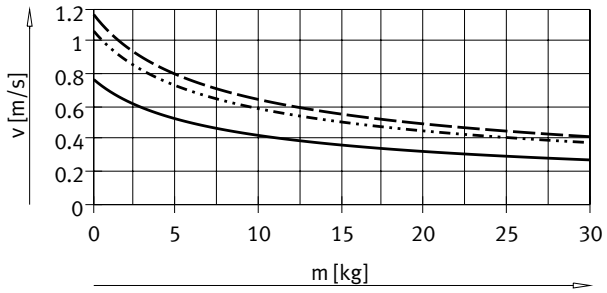

DSNU-40-50
DSNU-40-100
DSNU-40-200

Piston Ø 50

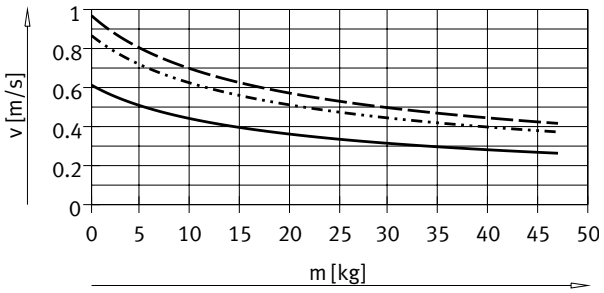

DSNU-50-50
DSNU-50-100
DSNU-50-200

Piston Ø 63

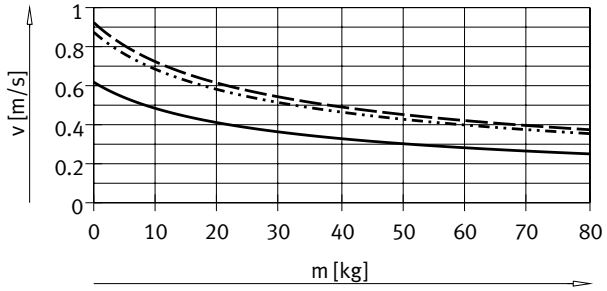

DSNU-63-50
DSNU-63-100
DSNU-63-200

Note:

Engineering software for
P cushioning
PPV cushioning
PPS cushioning
➔ https://www.festo.com/x/pneumatic-sizing

Average piston speed = Stroke/movement time

Datasheet

Max. transverse force Fq as a function of projection l

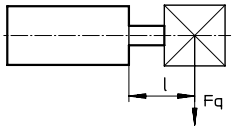

DSNU-...

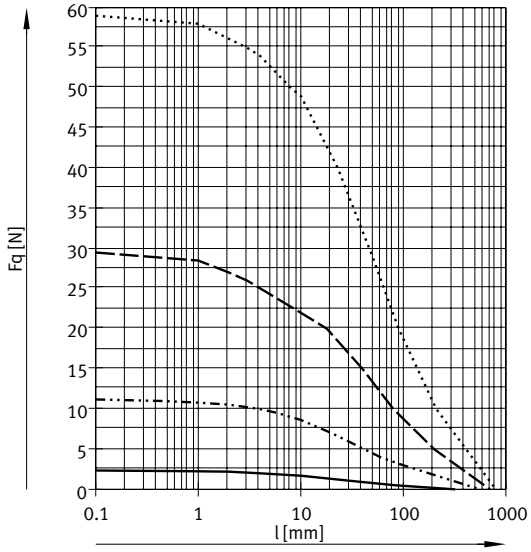

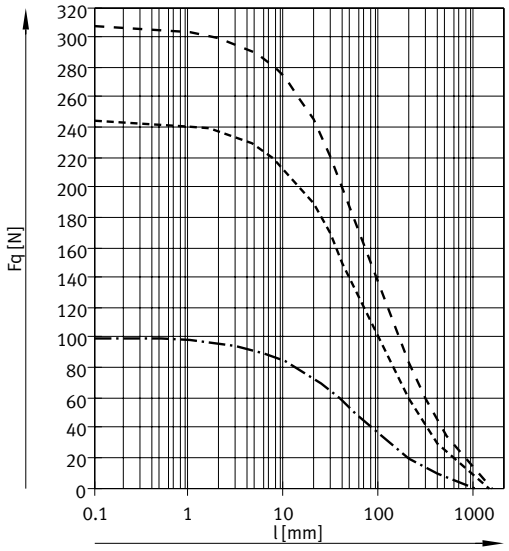

- DSNU-8/10
- DSNU-12/16
- DSNU-20
- DSNU-25
- DSNU-32
- DSNU-40
- DSNU-50/63

DSNU-...-S2 – Through piston rod

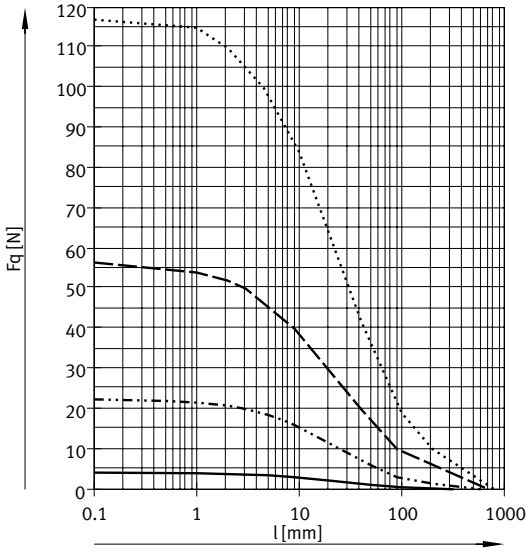

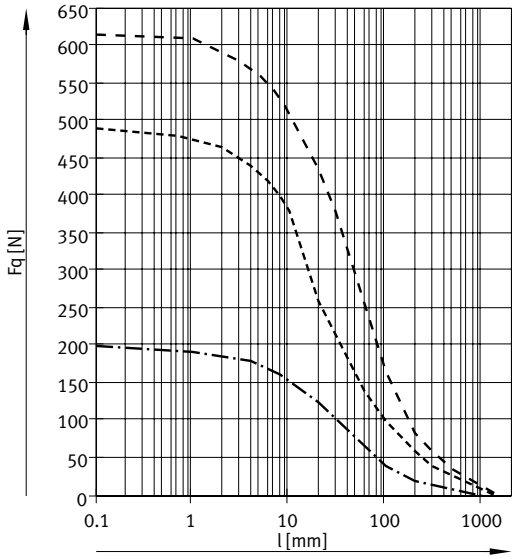

- DSNU-8/10
- DSNU-12/16
- DSNU-20
- DSNU-25
- DSNU-32
- DSNU-40
- DSNU-50/63

Datasheet

Materials

Sectional view

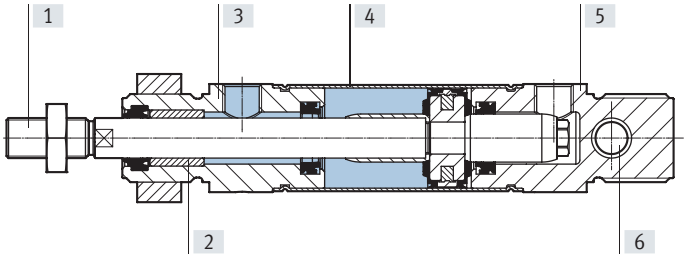

Round cylinder		8 ... 25	32 ... 63
[1]	Piston rod		
	DSNU-...	High-alloy steel	
	DSNU-...-R3	High-alloy stainless steel	
	DSNU-...-A6	–	Hard-chrome-plated tempered steel
[2]	Piston rod bearing	Sintered bronze	
[3]	Bearing cap	Wrought aluminium alloy, colourless anodised	
[4]	Cylinder barrel	High-alloy stainless steel	
[5]	End cap	Wrought aluminium alloy, colourless anodised	
[6]	Swivel bearing	Polymer	
–	Piston rod wiper seal		
	DSNU-...	TPE-U(PU)	
	DSNU-...-S6/-S10/-L/-A1	FPM	
	DSNU-...-R3	TPE-U (PU) media seal (modified for resistance to hydrolysis and cleaning)	
	Piston rod wiper		
	DSNU-...-A6	–	CuZn
	Stroke adjustment DSNU-...-KE		
	Stop element	PE-UHMW	
	Threaded coupling	Anodised aluminium	
	LABS (PWIS) conformity	VDMA24364-B1/B2-L[1)]	
	Cleanroom class	Class 6 to ISO 14644-1	
	Note on materials		
	DSNU-...	RoHs-compliant	
	DSNU-...-S10	Contains paint-wetting impairment substances	
	DSNU-...-F1A	Suitable for battery production with reduced Cu/Zn/Ni values (F1a)	

1) Applies to all variants except S10

Datasheet

Dimensions Download CAD data ➔ www.festo.com

DSNU-8 ... 25

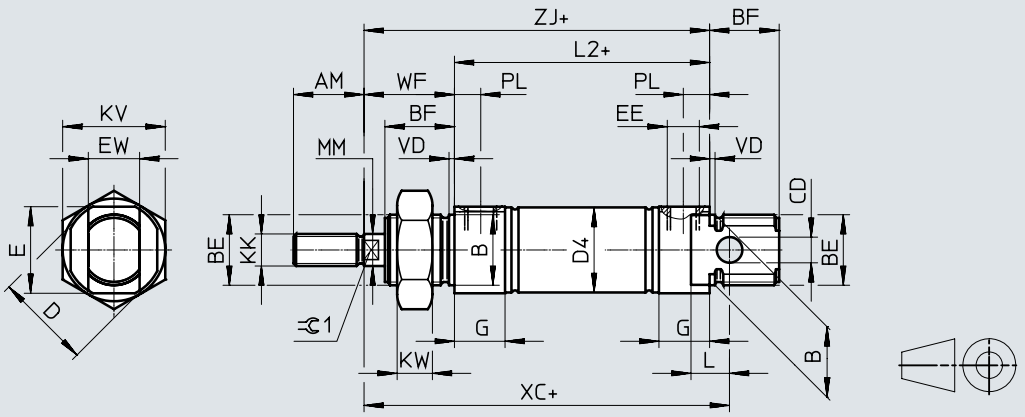

Note

Piston rod nut is not included in the scope of delivery for diameter 8 ... 20.

\+ = plus stroke length

ø [mm]	AM	B ø h8	BE	BF	CD ø H9	D ø	D4 ø	E	EE	EW	G
8	12	12	M12x1.25	12	4	16	9.3	14	M5	8	10
10							11.3				
12	16	16	M16x1.5	17	6	20	13.3	18		12	
16							17.3				
20	20	22	M22x1.5	20	8	30	21.3	26	G1/8	16	16
25	22			22			26.5	27			

ø [mm]	KK	KV	KW	MM ø	L	L2	PL	VD	WF ±1.2	XC ±1	ZJ	⊆1
8	M4	19	6	4	6	46	6	2	16	64	62	–
10												
12	M6	24	8	6	9	50			22	75	72	5
16						56				82	78	
20	M8	32	11	8	12	68	8.2		24	95	92	7
25	M10x1.25			10		69.5			28	104	97.5	9

Datasheet

Dimensions Download CAD data ➔ www.festo.com

DSNU-8 ... 25

MQ – Lateral supply port, short end cap

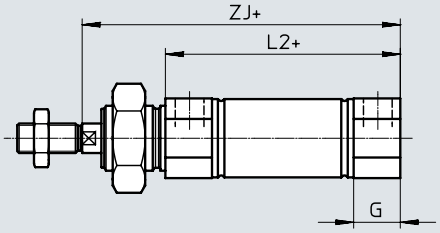

MA – Axial supply port, short end cap

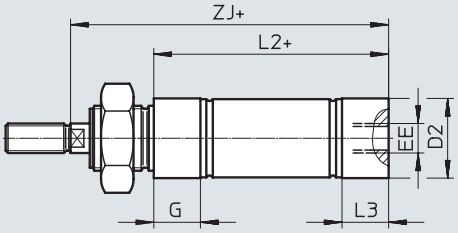

MH – With direct mounting

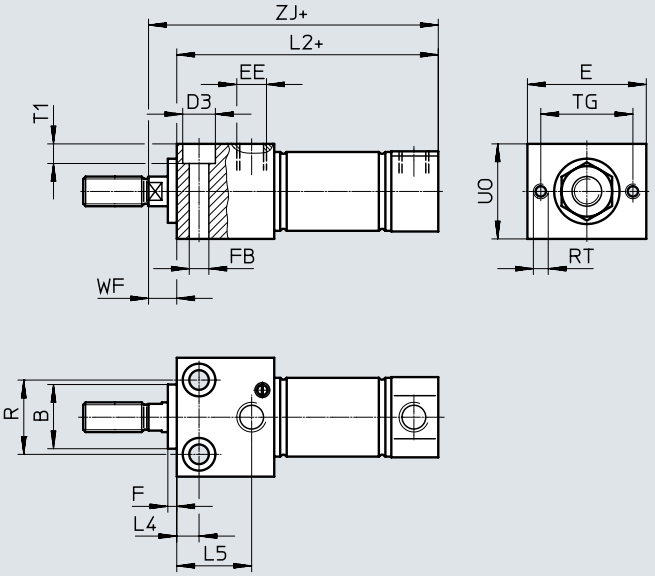

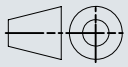

+ = plus stroke length

Datasheet

ø [mm]	B ø h8	D2 ø	D3 ø	E	EE	F	FB ø	G	L2 DSNU-... -MQ	L2 DSNU-... -MA	L2 DSNU-... -MH
8	12	10.5	6	24	M5	3	3.4	10	46	43.6	53.5
10		12.5								43.1	53.8
12	16	14.5	8	30			4.5		50	47.7	62
16		17.5							56	53.7	67.8
20	22	21.7	10	40	G1/8		5.5	16	68	66.5	81.5
25		26.7	11				6.6		69.5	68.5	86.2

ø [mm]	L3	L4	L5	R	RT	TG	T1	UO	WF	ZJ DSNU-... -MQ	ZJ DSNU-... -MA	ZJ DSNU-... -MH
8	7.6	5	14	12	M3	18	3.4	16	8	62	59.6	61.5
10	7.1										59.1	61.8
12	7.7	6	18.1	16	M4	23	4.5	22	10	72	69.7	72
16										78	75.7	77.8
20	14.5	7.5	22.4	22	M5	31	5.5	28		92	90.5	91.5
25	14		25.2	25			6.6	32	11	97.5	96.5	97.2

Datasheet

Dimensions

Download CAD data ➔ www.festo.com

DSNU-8 ... 25

S2 – Through piston rod

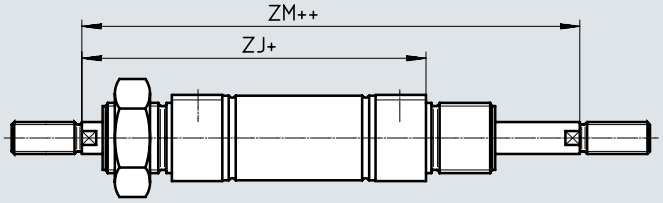

Note

The thread types at both piston rod ends are identical. In combination with variant Q, the left piston rod end is square, the right piston rod end round.

\+ = plus stroke length

++ = plus 2x stroke length

KE – Stroke adjustment

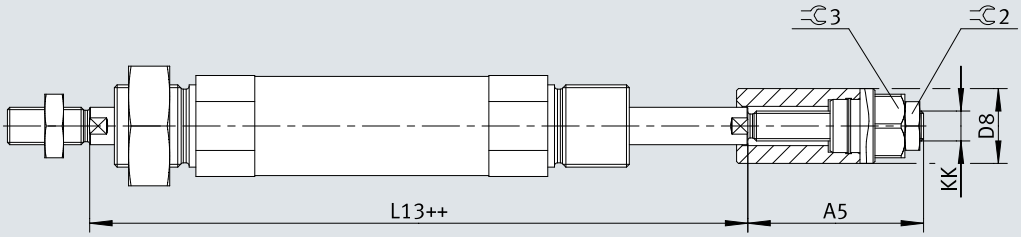

\+ = plus stroke length

++ = plus 2x stroke length

K2 – Extended male piston rod thread

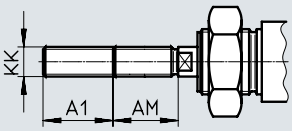

K6 – Shortened male piston rod thread

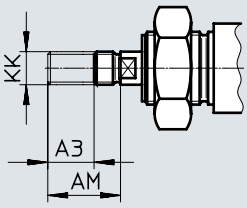

K3 – Female piston rod thread

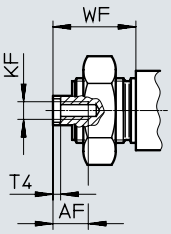

K5 – Special piston rod thread

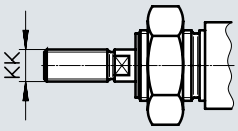

K8 – Extended piston rod

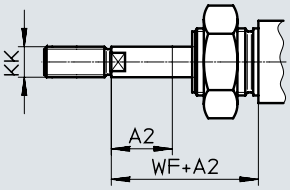

Note

If variant K8 is required in combination with S2, the piston rod will only be extended at one end.

Datasheet

⌀ [mm]	A1 max.	A2 max.	A3 max.	A5 DSNU-... -15KE	A5 DSNU-... -25KE	AF	AM	D8 ⌀	KF	KK Basic thread	KK Special thread1)
8	15	50	4	27.5	–	–	12	12	–	M4	–
10						–			–		–
12	20	100		–	43	–	16	15	–	M6	–
16						–			–		–
20	25	110	8		47	12	20	20	M4	M8	–
25	35	150					22		M6	M10x1.25	M10

1) The special threads are only available as male threads. The scope of delivery does not include a hex nut for the piston rod thread

⌀ [mm]	L13 +1	T4	WF ±1.2	ZJ DSNU-... -MQ	ZJ DSNU-... -MA	ZJ DSNU-... -MH	ZM	⬡ 2	⬡ 3
8	78	–	16	62	59.6	61.5	78.4	7	10
10		–			59.1	61.8			
12	94	–	22	72	69.7	72	94	10	13
16	100	–		78	75.7	77.8	100		
20	116	2	24	92	90.5	91.5	116	13	17
25	125.5	2.6	28	97.5	96.5	97.2	125.5		

Datasheet

Dimensions Download CAD data ➔ www.festo.com

DSNU-32 ... 63

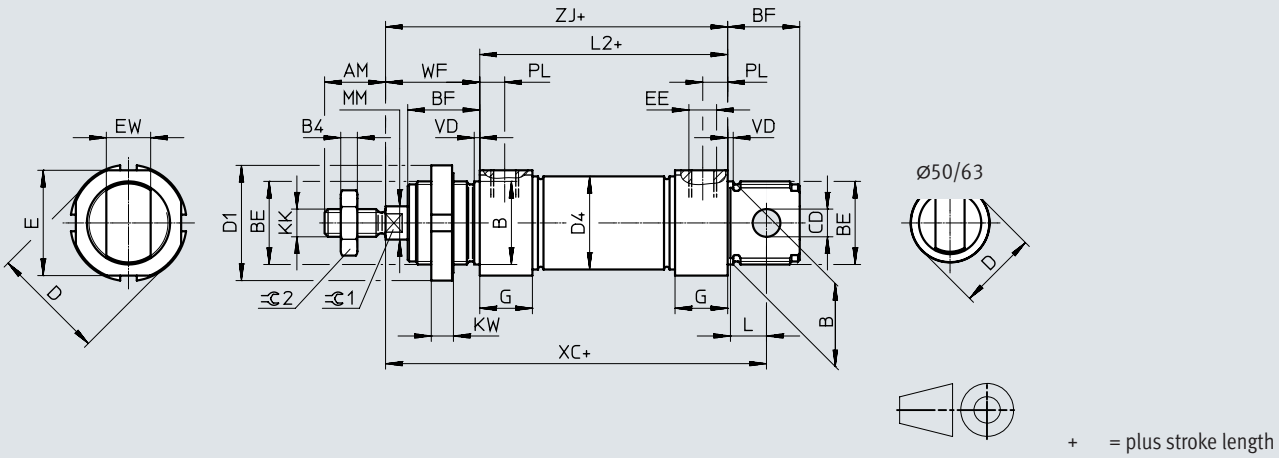

\+ = plus stroke length

Ø [mm]	AM	B Ø h8	BE	BF	B4	CD Ø H9	D Ø	D1 Ø	D4 Ø	E	EE	EW
32	22	30	M30x1.5	26	5	10	41	42	33.6	38	G1/8	16
40	24	38	M38x1.5	30	6	12	49	50	41.6	45	G1/4	18
50	32	45	M45x1.5	33	8	16	57	60	52.4	–		21
63							70		65.4		G3/8	

Ø [mm]	G	KK	KW	MM Ø	L	L2	PL	VD	WF ±1.2	XC ±1	ZJ	=⊂1	=⊂2
32	19	M10x1.25	8	12	13	69.5	9	2	34	117.5	103.5	10	16
40	25	M12x1.25	10	16	15	84.6	12	3	39	139.6	123.6	13	18
50		M16x1.5		20	16	86.2			44	147.2	130.2	17	24
63	28					94.2	13		45	156.2	139.2		

Datasheet

Dimensions Download CAD data ➔ www.festo.com

DSNU-32 ... 63

MQ – Lateral supply port, short end cap

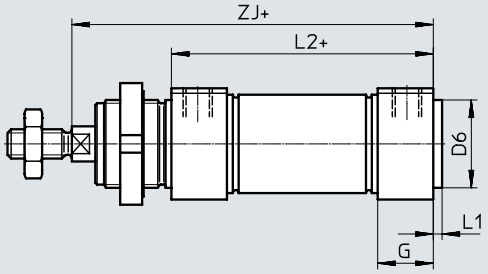

MA – Axial supply port, short end cap

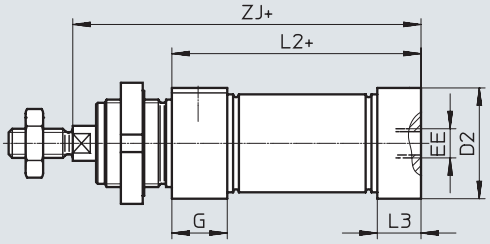

MH – With direct mounting

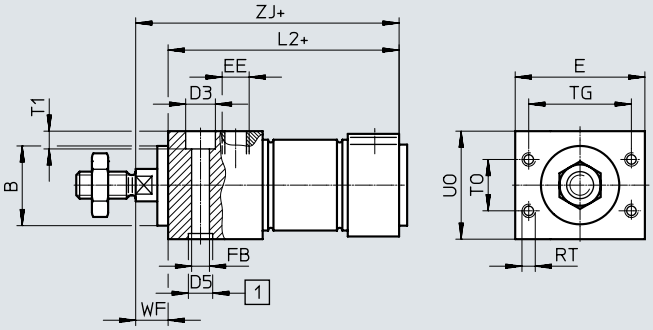

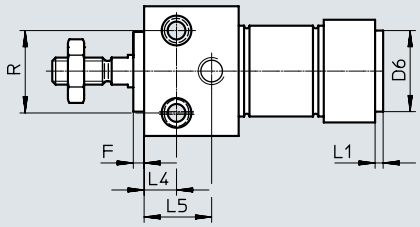

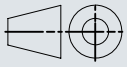

[1] Centring holes (2 centring sleeves included in the scope of delivery)

\+ = plus stroke length

ø [mm]	B ø h8	B2	E	EE	G	F	FB ø	D2 ø	D3 ø	D5 ø	D6 ø	L1	L2 DSNU-... -MQ	L2 DSNU-... -MA	L2 DSNU-... -MH
32	30	1	48	G1/8	19	4	6.6	34	11	9	30	3	69.5	65.5	85.5
40	38		54	G1/4	25		9	42	14	12	38	4	84.6	77.6	104.6
50	45		64					53			45		86.2	86.2	109.2
63		2	72	G3/8	28		11	66	18	15			94.2	94.2	117.2

ø [mm]	L3	L4	L5	R	RT	TO	T1	T2	TG	UO	WF	ZJ DSNU-... -MQ	ZJ DSNU-... -MA	ZJ DSNU-... -MH
32	15	12	25	30	M5	19	6.6	2.1	38	40	12	103.5	99.5	97.5
40	18	15	32	38		24	9	2.6	42	48		123.6	116.6	116.6
50	25		35	42	M6	32			50	58	15	130.2	130.2	124.2
63	28		36	44	M8	36	11	3.1	52	72		139.2	139.2	132.2

Datasheet

Dimensions Download CAD data ➔ www.festo.com

DSNU-32 ... 63
S2 – Through piston rod

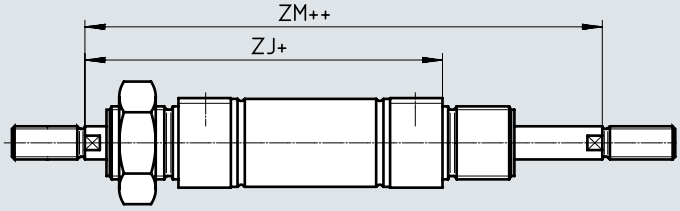

Note
The thread types at both piston rod ends are identical. In combination with variant Q, the left piston rod end is square, the right piston rod end round.

\+ = plus stroke length
++ = plus 2x stroke length

KE – Stroke adjustment

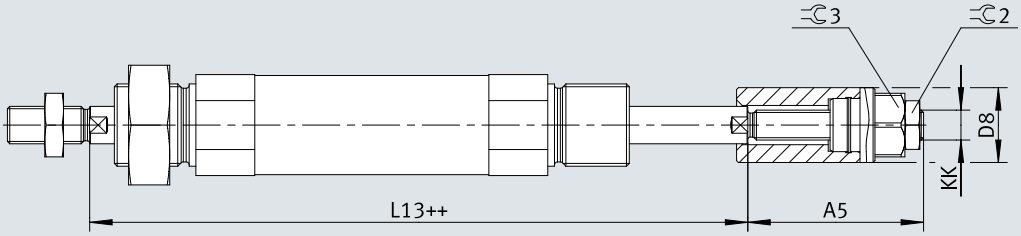

\+ = plus stroke length
++ = plus 2x stroke length

K2 – Extended male piston rod thread

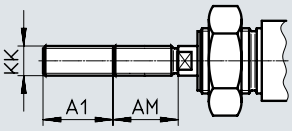

K6 – Shortened male piston rod thread

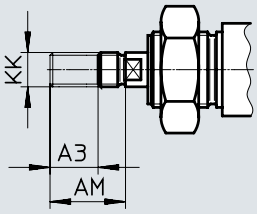

K3 – Female piston rod thread

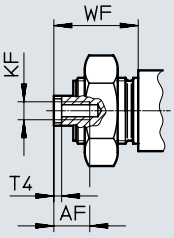

K5 – Special piston rod thread

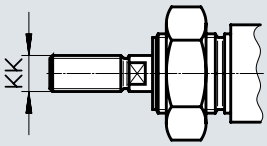

K8 – Extended piston rod

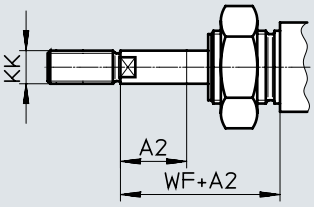

Note
If variant K8 is required in combination with S2, the piston rod will only be extended at one end.

Datasheet

ø [mm]	A1 max.	A2 max.	A3 max.	A5 DSNU-... -25KE	A5 DSNU-... -50KE	AF	AM	D8 ø	KF	KK Basic thread	KK Special thread1)
32	35	500	8	52	–	12	22	30	M6	M10x1.25	M10
40				56	81		24	35	M8	M12x1.25	M12
50	70		10	67	92	16	32	45	M10	M16x1.5	M16
63											

1) The special threads are only available as male threads. The scope of delivery does not include a hex nut for the piston rod thread

ø [mm]	L13 +1	T4	WF ±1.2	ZJ DSNU-... -MQ	ZJ DSNU-... -MA	ZJ DSNU-... -MH	ZM	⌯ 2	⌯ 3
32	137.5	2.6	34	103.5	99.5	97.5	137.5	17	24
40	162.6	3.3	39	123.6	111.6	116.6	162.6	19	30
50	174.2	4.7	44	130.2	130.2	124.2	174.2	24	
63	184.2		45	139.2	139.2	132.2	184.2		

Datasheet

Ordering data

Piston ø [mm]	Stroke [mm]	P – Elastic cushioning rings/plates at both ends A – With position sensing Part no.	Type	PPV – Pneumatic cushioning, adjustable at both ends A – With position sensing Part no.	Type	PPS – Pneumatic cushioning, self-adjusting at both ends A – With position sensing Part no.	Type
8	10	19177	DSNU-8-10-P-A	–		–	
	15	1908247	DSNU-8-15-P-A				
	20	1908248	DSNU-8-20-P-A				
	25	19178	DSNU-8-25-P-A				
	30	1908249	DSNU-8-30-P-A				
	40	19179	DSNU-8-40-P-A				
	50	19180	DSNU-8-50-P-A				
	60	1908250	DSNU-8-60-P-A				
	80	19181	DSNU-8-80-P-A				
	100	19182	DSNU-8-100-P-A				
10	10	19183	DSNU-10-10-P-A	–		–	
	15	1908251	DSNU-10-15-P-A				
	20	1908252	DSNU-10-20-P-A				
	25	19184	DSNU-10-25-P-A				
	30	1908253	DSNU-10-30-P-A				
	40	19185	DSNU-10-40-P-A				
	50	19186	DSNU-10-50-P-A				
	60	1908254	DSNU-10-60-P-A				
	80	19187	DSNU-10-80-P-A				
	100	19188	DSNU-10-100-P-A				
12	10	19189	DSNU-12-10-P-A	–		–	
	15	1908255	DSNU-12-15-P-A				
	20	1908256	DSNU-12-20-P-A				
	25	19190	DSNU-12-25-P-A				
	30	1908257	DSNU-12-30-P-A				
	40	19191	DSNU-12-40-P-A				
	50	19192	DSNU-12-50-P-A				
	60	1908258	DSNU-12-60-P-A				
	70	5249943	DSNU-12-70-P-A				
	80	19193	DSNU-12-80-P-A				
	100	19194	DSNU-12-100-P-A				
	125	19195	DSNU-12-125-P-A				
	150	5249947	DSNU-12-150-P-A				
	160	19196	DSNU-12-160-P-A				
	200	19197	DSNU-12-200-P-A				
16	10	19198	DSNU-16-10-P-A	1908266	DSNU-16-10-PPV-A	1908274	DSNU-16-10-PPS-A
	15	1908259	DSNU-16-15-P-A	1908267	DSNU-16-15-PPV-A	1908275	DSNU-16-15-PPS-A
	20	1908260	DSNU-16-20-P-A	1908268	DSNU-16-20-PPV-A	1908276	DSNU-16-20-PPS-A
	25	19199	DSNU-16-25-P-A	33973	DSNU-16-25-PPV-A	559263	DSNU-16-25-PPS-A
	30	1908261	DSNU-16-30-P-A	1908269	DSNU-16-30-PPV-A	1908277	DSNU-16-30-PPS-A
	35	1908262	DSNU-16-35-P-A	1908270	DSNU-16-35-PPV-A	1908278	DSNU-16-35-PPS-A
	40	19200	DSNU-16-40-P-A	19229	DSNU-16-40-PPV-A	559264	DSNU-16-40-PPS-A
	50	19201	DSNU-16-50-P-A	19230	DSNU-16-50-PPV-A	559265	DSNU-16-50-PPS-A
	60	1908263	DSNU-16-60-P-A	1908271	DSNU-16-60-PPV-A	1908279	DSNU-16-60-PPS-A
	70	1908264	DSNU-16-70-P-A	1908272	DSNU-16-70-PPV-A	1908280	DSNU-16-70-PPS-A
	80	19202	DSNU-16-80-P-A	19231	DSNU-16-80-PPV-A	559266	DSNU-16-80-PPS-A
	100	19203	DSNU-16-100-P-A	19232	DSNU-16-100-PPV-A	559267	DSNU-16-100-PPS-A
	125	19204	DSNU-16-125-P-A	19233	DSNU-16-125-PPV-A	559268	DSNU-16-125-PPS-A
	150	1908265	DSNU-16-150-P-A	1908273	DSNU-16-150-PPV-A	1908281	DSNU-16-150-PPS-A
	160	19205	DSNU-16-160-P-A	19234	DSNU-16-160-PPV-A	559269	DSNU-16-160-PPS-A
	200	19206	DSNU-16-200-P-A	19235	DSNU-16-200-PPV-A	559270	DSNU-16-200-PPS-A

Datasheet

Ordering data							
Piston Ø	Stroke	P – Elastic cushioning rings/plates at both ends A – With position sensing		PPV – Pneumatic cushioning, adjustable at both ends A – With position sensing		PPS – Pneumatic cushioning, self-adjusting at both ends A – With position sensing	
[mm]	[mm]	Part no.	Type	Part no.	Type	Part no.	Type
20	10	19207	DSNU-20-10-P-A	1908289	DSNU-20-10-PPV-A	1908297	DSNU-20-10-PPS-A
	15	1908282	DSNU-20-15-P-A	1908290	DSNU-20-15-PPV-A	1908298	DSNU-20-15-PPS-A
	20	1908283	DSNU-20-20-P-A	1908291	DSNU-20-20-PPV-A	1908299	DSNU-20-20-PPS-A
	25	19208	DSNU-20-25-P-A	33974	DSNU-20-25-PPV-A	559271	DSNU-20-25-PPS-A
	30	1908284	DSNU-20-30-P-A	1908292	DSNU-20-30-PPV-A	1908300	DSNU-20-30-PPS-A
	35	1908285	DSNU-20-35-P-A	1908293	DSNU-20-35-PPV-A	1908301	DSNU-20-35-PPS-A
	40	19209	DSNU-20-40-P-A	19236	DSNU-20-40-PPV-A	559272	DSNU-20-40-PPS-A
	50	19210	DSNU-20-50-P-A	19237	DSNU-20-50-PPV-A	559273	DSNU-20-50-PPS-A
	60	1908286	DSNU-20-60-P-A	1908294	DSNU-20-60-PPV-A	1908302	DSNU-20-60-PPS-A
	70	1908287	DSNU-20-70-P-A	1908295	DSNU-20-70-PPV-A	1908303	DSNU-20-70-PPS-A
	80	19211	DSNU-20-80-P-A	19238	DSNU-20-80-PPV-A	559274	DSNU-20-80-PPS-A
	100	19212	DSNU-20-100-P-A	19239	DSNU-20-100-PPV-A	559275	DSNU-20-100-PPS-A
	125	19213	DSNU-20-125-P-A	19240	DSNU-20-125-PPV-A	559276	DSNU-20-125-PPS-A
	150	1908288	DSNU-20-150-P-A	1908296	DSNU-20-150-PPV-A	1908304	DSNU-20-150-PPS-A
	160	19214	DSNU-20-160-P-A	19241	DSNU-20-160-PPV-A	559277	DSNU-20-160-PPS-A
	200	19215	DSNU-20-200-P-A	19242	DSNU-20-200-PPV-A	559278	DSNU-20-200-PPS-A
	250	19216	DSNU-20-250-P-A	19243	DSNU-20-250-PPV-A	559279	DSNU-20-250-PPS-A
	300	19217	DSNU-20-300-P-A	19244	DSNU-20-300-PPV-A	559280	DSNU-20-300-PPS-A
	320	34718	DSNU-20-320-P-A	34720	DSNU-20-320-PPV-A	559281	DSNU-20-320-PPS-A
25	10	19218	DSNU-25-10-P-A	1908312	DSNU-25-10-PPV-A	1908320	DSNU-25-10-PPS-A
	15	1908305	DSNU-25-15-P-A	1908313	DSNU-25-15-PPV-A	1908321	DSNU-25-15-PPS-A
	20	1908306	DSNU-25-20-P-A	1908314	DSNU-25-20-PPV-A	1908322	DSNU-25-20-PPS-A
	25	19219	DSNU-25-25-P-A	33975	DSNU-25-25-PPV-A	559282	DSNU-25-25-PPS-A
	30	1908307	DSNU-25-30-P-A	1908315	DSNU-25-30-PPV-A	1908323	DSNU-25-30-PPS-A
	35	1908308	DSNU-25-35-P-A	1908316	DSNU-25-35-PPV-A	1908324	DSNU-25-35-PPS-A
	40	19220	DSNU-25-40-P-A	19245	DSNU-25-40-PPV-A	559283	DSNU-25-40-PPS-A
	50	19221	DSNU-25-50-P-A	19246	DSNU-25-50-PPV-A	559284	DSNU-25-50-PPS-A
	60	1908309	DSNU-25-60-P-A	1908317	DSNU-25-60-PPV-A	1908325	DSNU-25-60-PPS-A
	70	1908310	DSNU-25-70-P-A	1908318	DSNU-25-70-PPV-A	1908326	DSNU-25-70-PPS-A
	80	19222	DSNU-25-80-P-A	19247	DSNU-25-80-PPV-A	559285	DSNU-25-80-PPS-A
	100	19223	DSNU-25-100-P-A	19248	DSNU-25-100-PPV-A	559286	DSNU-25-100-PPS-A
	125	19224	DSNU-25-125-P-A	19249	DSNU-25-125-PPV-A	559287	DSNU-25-125-PPS-A
	150	1908311	DSNU-25-150-P-A	1908319	DSNU-25-150-PPV-A	1908327	DSNU-25-150-PPS-A
	160	19225	DSNU-25-160-P-A	19250	DSNU-25-160-PPV-A	559288	DSNU-25-160-PPS-A
	200	19226	DSNU-25-200-P-A	19251	DSNU-25-200-PPV-A	559289	DSNU-25-200-PPS-A
	250	19227	DSNU-25-250-P-A	19252	DSNU-25-250-PPV-A	559290	DSNU-25-250-PPS-A
	300	19228	DSNU-25-300-P-A	19253	DSNU-25-300-PPV-A	559291	DSNU-25-300-PPS-A
	320	34719	DSNU-25-320-P-A	34721	DSNU-25-320-PPV-A	559292	DSNU-25-320-PPS-A
	400	35191	DSNU-25-400-P-A	35193	DSNU-25-400-PPV-A	559293	DSNU-25-400-PPS-A
	500	35192	DSNU-25-500-P-A	35194	DSNU-25-500-PPV-A	559294	DSNU-25-500-PPS-A

Datasheet

Ordering data							
Piston ø	Stroke	P – Elastic cushioning rings/plates at both ends A – With position sensing		PPV – Pneumatic cushioning, adjustable at both ends A – With position sensing		PPS – Pneumatic cushioning, self-adjusting at both ends A – With position sensing	
[mm]	[mm]	Part no.	Type	Part no.	Type	Part no.	Type
32	10	5249365	DSNU-32-10-P-A	–		–	
	15	5249366	DSNU-32-15-P-A				
	20	5249367	DSNU-32-20-P-A				
	25	195980	DSNU-32-25-P-A	196020	DSNU-32-25-PPV-A	559295	DSNU-32-25-PPS-A
	30	5249368	DSNU-32-30-P-A	5249851	DSNU-32-30-PPV-A	5249968	DSNU-32-30-PPS-A
	40	195981	DSNU-32-40-P-A	196021	DSNU-32-40-PPV-A	559296	DSNU-32-40-PPS-A
	50	195982	DSNU-32-50-P-A	196022	DSNU-32-50-PPV-A	559297	DSNU-32-50-PPS-A
	60	5249369	DSNU-32-60-P-A	5249853	DSNU-32-60-PPV-A	5249970	DSNU-32-60-PPS-A
	70	5249370	DSNU-32-70-P-A	5249854	DSNU-32-70-PPV-A	5249971	DSNU-32-70-PPS-A
	80	195983	DSNU-32-80-P-A	196023	DSNU-32-80-PPV-A	559298	DSNU-32-80-PPS-A
	100	195984	DSNU-32-100-P-A	196024	DSNU-32-100-PPV-A	559299	DSNU-32-100-PPS-A
	125	195985	DSNU-32-125-P-A	196025	DSNU-32-125-PPV-A	559300	DSNU-32-125-PPS-A
	150	5249371	DSNU-32-150-P-A	5249855	DSNU-32-150-PPV-A	5249972	DSNU-32-150-PPS-A
	160	195986	DSNU-32-160-P-A	196026	DSNU-32-160-PPV-A	559301	DSNU-32-160-PPS-A
	200	195987	DSNU-32-200-P-A	196027	DSNU-32-200-PPV-A	559302	DSNU-32-200-PPS-A
	250	195988	DSNU-32-250-P-A	196028	DSNU-32-250-PPV-A	559303	DSNU-32-250-PPS-A
	300	5249372	DSNU-32-300-P-A	5249856	DSNU-32-300-PPV-A	5249973	DSNU-32-300-PPS-A
	320	195989	DSNU-32-320-P-A	196029	DSNU-32-320-PPV-A	559304	DSNU-32-320-PPS-A
40	10	5262529	DSNU-40-10-P-A	–		–	
	15	5262530	DSNU-40-15-P-A				
	20	5262531	DSNU-40-20-P-A				
	25	195990	DSNU-40-25-P-A	196030	DSNU-40-25-PPV-A	559305	DSNU-40-25-PPS-A
	30	5262532	DSNU-40-30-P-A	5262705	DSNU-40-30-PPV-A	5262768	DSNU-40-30-PPS-A
	40	195991	DSNU-40-40-P-A	196031	DSNU-40-40-PPV-A	559306	DSNU-40-40-PPS-A
	50	195992	DSNU-40-50-P-A	196032	DSNU-40-50-PPV-A	559307	DSNU-40-50-PPS-A
	60	5262534	DSNU-40-60-P-A	5262706	DSNU-40-60-PPV-A	5262769	DSNU-40-60-PPS-A
	70	5262535	DSNU-40-70-P-A	5262707	DSNU-40-70-PPV-A	5262771	DSNU-40-70-PPS-A
	80	195993	DSNU-40-80-P-A	196033	DSNU-40-80-PPV-A	559308	DSNU-40-80-PPS-A
	100	195994	DSNU-40-100-P-A	196034	DSNU-40-100-PPV-A	559309	DSNU-40-100-PPS-A
	125	195995	DSNU-40-125-P-A	196035	DSNU-40-125-PPV-A	559310	DSNU-40-125-PPS-A
	150	5262536	DSNU-40-150-P-A	5262708	DSNU-40-150-PPV-A	5262772	DSNU-40-150-PPS-A
	160	195996	DSNU-40-160-P-A	196036	DSNU-40-160-PPV-A	559311	DSNU-40-160-PPS-A
	200	195997	DSNU-40-200-P-A	196037	DSNU-40-200-PPV-A	559312	DSNU-40-200-PPS-A
	250	195998	DSNU-40-250-P-A	196038	DSNU-40-250-PPV-A	559313	DSNU-40-250-PPS-A
	300	5262537	DSNU-40-300-P-A	5262709	DSNU-40-300-PPV-A	5262773	DSNU-40-300-PPS-A
	320	195999	DSNU-40-320-P-A	196039	DSNU-40-320-PPV-A	559314	DSNU-40-320-PPS-A

Datasheet

Ordering data

Piston Ø	Stroke	P – Elastic cushioning rings/plates at both ends A – With position sensing		PPV – Pneumatic cushioning, adjustable at both ends A – With position sensing		PPS – Pneumatic cushioning, self-adjusting at both ends A – With position sensing	
[mm]	[mm]	Part no.	Type	Part no.	Type	Part no.	Type
50	25	196000	DSNU-50-25-P-A	196040	DSNU-50-25-PPV-A	559315	DSNU-50-25-PPS-A
	40	196001	DSNU-50-40-P-A	196041	DSNU-50-40-PPV-A	559316	DSNU-50-40-PPS-A
	50	196002	DSNU-50-50-P-A	196042	DSNU-50-50-PPV-A	559317	DSNU-50-50-PPS-A
	80	196003	DSNU-50-80-P-A	196043	DSNU-50-80-PPV-A	559318	DSNU-50-80-PPS-A
	100	196004	DSNU-50-100-P-A	196044	DSNU-50-100-PPV-A	559319	DSNU-50-100-PPS-A
	125	196005	DSNU-50-125-P-A	196045	DSNU-50-125-PPV-A	559320	DSNU-50-125-PPS-A
	160	196006	DSNU-50-160-P-A	196046	DSNU-50-160-PPV-A	559321	DSNU-50-160-PPS-A
	200	196007	DSNU-50-200-P-A	196047	DSNU-50-200-PPV-A	559322	DSNU-50-200-PPS-A
	250	196008	DSNU-50-250-P-A	196048	DSNU-50-250-PPV-A	559323	DSNU-50-250-PPS-A
	320	196009	DSNU-50-320-P-A	196049	DSNU-50-320-PPV-A	559324	DSNU-50-320-PPS-A
63	25	196010	DSNU-63-25-P-A	196050	DSNU-63-25-PPV-A	559325	DSNU-63-25-PPS-A
	40	196011	DSNU-63-40-P-A	196051	DSNU-63-40-PPV-A	559326	DSNU-63-40-PPS-A
	50	196012	DSNU-63-50-P-A	196052	DSNU-63-50-PPV-A	559327	DSNU-63-50-PPS-A
	80	196013	DSNU-63-80-P-A	196053	DSNU-63-80-PPV-A	559328	DSNU-63-80-PPS-A
	100	196014	DSNU-63-100-P-A	196054	DSNU-63-100-PPV-A	559329	DSNU-63-100-PPS-A
	125	196015	DSNU-63-125-P-A	196055	DSNU-63-125-PPV-A	559330	DSNU-63-125-PPS-A
	160	196016	DSNU-63-160-P-A	196056	DSNU-63-160-PPV-A	559331	DSNU-63-160-PPS-A
	200	196017	DSNU-63-200-P-A	196057	DSNU-63-200-PPV-A	559332	DSNU-63-200-PPS-A
	250	196018	DSNU-63-250-P-A	196058	DSNU-63-250-PPV-A	559333	DSNU-63-250-PPS-A
	320	196019	DSNU-63-320-P-A	196059	DSNU-63-320-PPV-A	559334	DSNU-63-320-PPS-A

Ordering data for variable strokes

Piston Ø	Stroke	P – Elastic cushioning rings/plates at both ends A – With position sensing		PPV – Pneumatic cushioning, adjustable at both ends A – With position sensing	
[mm]	[mm]	Part no.	Type	Part no.	Type
8	1 ... 100	14326	DSNU-8-...-P-A	–	
10	1 ... 100	14325	DSNU-10-...-P-A		
12	1 ... 200	14324	DSNU-12-...-P-A		
16	1 ... 200	14323	DSNU-16-...-P-A	14320	DSNU-16-...-PPV-A
20	1 ... 320	14328	DSNU-20-...-P-A	14321	DSNU-20-...-PPV-A
25	1 ... 500	14327	DSNU-25-...-P-A	14322	DSNU-25-...-PPV-A

Ordering data – Modular product system

Ordering table

Size		8	10	12	16	20	25	Conditions	Code		Enter code
Module no.		**193986**	**193987**	**193988**	**193989**	**193990**	**193991**				
Function		Round cylinder, double-acting, based on ISO 6432							**DSNU**		DSNU
Piston ⌀	[mm]	8	10	12	16	20	25		**-...**		
Stroke	[mm]	1 ... 100		1 ... 200		1 ... 320	1 ... 500	[1]	**-...**		
Cushioning		Elastic cushioning rings/plates at both ends							**-P**		
		–	–	Pneumatic cushioning, adjustable at both ends				[2]	**-PPV**		
		–	–	–	Pneumatic cushioning, self-adjusting at both ends			[3]	**-PPS**		
Position sensing		Via proximity switch						[4]	**-A**		-A
Cylinder end cap		Lateral supply port, short end cap						[5]	**-MQ**		
		Axial supply port, short end cap						[5]	**-MA**		
		With mounting flange at front (direct mounting), bearing cap						[6]	**-MH**		
Piston rod type		Through piston rod						[7]	**-S2**		
Stroke adjustment, advancing	[mm]	0 ... 15		–				[8]	**-15KE**		
	[mm]	–		0 ... 25				[9]	**-25KE**		

[1]	-...	Longer strokes on request
[2]	PPV	Not with MA. In combination with S6, S10, L, A1 not with piston diameter 12 mm
[3]	PPS	Not with MA, MH, S6, S10 and not with combination MQ-R3
[4]	A	Minimum stroke › 10 mm required for reliable sensing
[5]	MQ, MA	Not with S2, S10
[6]	MH	Not with combination S6-R3. Not with S10
[7]	S2	Not with S10
[8]	15KE	Not with MQ, MA, S2, S6, S10, L, A1, EX4
[9]	25KE	Not with MQ, MA, S2, S6, S10, L, A1, EX4 With piston diameter 20, 25: stroke only up to 250 mm

Note

The bellows kit DADB must not be used in combination with the variant MH.
The running characteristics change slightly when the bellows kit DADB is combined with the variant S10 or L

Note

Cylinders with position sensing require a minimum stroke of 10 mm to ensure reliable sensing.
Longer strokes on request

Ordering data – Modular product system

Ordering table

Size		8	10	12	16	20	25	Conditions	Code		Enter code
Extended male thread		Extended male piston rod thread									
	[mm]	1 ... 15		1 ... 20		1 ... 25	1 ... 35	[10]	**-...K2**		
Shortened male thread		Shortened male piston rod thread									
	[mm]	1 ... 4				1 ... 8	1 ... 10	[11]	**-...K6**		
Female thread		Piston rod with female thread									
		–	–	–	–	(M4)	(M6)	[12]	**-K3**		
Special thread		Special piston rod thread									
		–	–	–	–	–	M10		**-"..."K5**		
Extended piston rod at one end		Piston rod extended at one end									
	[mm]	1 ... 50		1 ... 100		1 ... 110	1 ... 150		**...K8**		
Temperature resistance		Heat-resistant seals max. 120 °C						[13]	**-S6**		
Constant motion		–	–	Slow speed (constant motion at low piston speeds)				[14]	**-S10**		
Running characteristic		Low friction						[15]	**-L**		
Corrosion protection		–	–	High corrosion protection					**-R3**		
Wiper		–	–	Increased chemical resistance				[16]	**-A1**		
EU certification		II 2GD						[17]	**-EX4**		

[10] K2 Not with K3, K6
[11] K6 Not with K3
[12] K3 Not with K5
[13] S6 Not with S10
[14] S10 Not with R3, L
[15] L Not with MQ, MA, MH, S2, S6, S10
[16] A1 Not with MH, S6, S10, L
[17] EX4 Not with S6

Ordering data – Modular product system

Ordering table

Size		32	40	50	63	Conditions	Code		Enter code
Module no.		**193992**	**193993**	**193994**	**193995**				
Function		Double-acting round cylinder					**DSNU**		DSNU
Piston ⌀	[mm]	32	40	50	63		**-...**		
Stroke	[mm]	1 ... 500				[1]	**-...**		
Cushioning		Elastic cushioning rings/plates at both ends					**-P**		
		Pneumatic cushioning, adjustable at both ends				[2]	**-PPV**		
		Pneumatic cushioning, self-adjusting at both ends				[3]	**-PPS**		
Position sensing		Via proximity switch				[4]	**-A**		-A
Cylinder end cap		Lateral supply port, short end cap				[5]	**-MQ**		
		Axial supply port, short end cap				[6]	**-MA**		
		Mounting flange at the front (direct mounting), bearing cap				[7]	**-MH**		
Piston rod type		Through piston rod				[8]	**-S2**		
Stroke adjustment,	[mm]	0 ... 25				[9]	**-25KE**		
advancing	[mm]	–	0 ... 50			[10]	**-50KE**		

[1]	-...	Longer strokes on request
[2]	PPV	Not with MA
[3]	PPS	Not with MA, MH, S6, S10, combination MQ-R3 and R8
[4]	A	Minimum stroke › 10 mm required for reliable sensing
[5]	MQ	Not with S2, S10
[6]	MA	Not with S2, S10 R8
[7]	MH	Not with combination S6-R3. Not with S10, R8
[8]	S2	Not with S10
[9]	25KE	Not with MQ, MA, S2, S6, S10, L, R8, A1, A6, EX4
[10]	50KE	Not with MQ, MA, S2, S6, S10, L, R8, A1, A6, EX4

Note

The bellows kit DADB must not be used in combination with the variant MH.
The running characteristics change slightly when the bellows kit DADB is combined with the variant S10 or L

Note

Cylinders with position sensing require a minimum stroke of 10 mm to ensure reliable sensing.
Longer strokes on request

Ordering data – Modular product system

Ordering table

Size		32	40	50	63	Conditions	Code		Enter code
Extended male thread		Extended male piston rod thread							
	[mm]	1 ... 35		1 ... 70		[11]	**-...K2**		
Shortened male thread		Shortened male piston rod thread							
	[mm]	1 ... 8		1 ... 10		[12]	**-...K6**		
Female thread		Piston rod with female thread							
		(M6)	(M8)	(M10)		[13]	**-K3**		
Special thread		Special piston rod thread							
		M10	M12	M16			**-"..."K5**		
Extended piston rod at one end		Piston rod extended at one end							
	[mm]	1 ... 500					**...K8**		
Temperature resistance		Heat-resistant seals max. 120 °C				[14]	**-S6**		
Constant motion		Slow speed (constant motion at low piston speeds)				[15]	**-S10**		
Running characteristic		Low friction				[16]	**-L**		
Corrosion protection		High corrosion protection				[17]	**-R3**		
Wiper		Dust protection				[18]	**-R8**		
		Increased chemical resistance				[19]	**-A1**		
		Metal wiper				[20]	**-A6**		
EU certification		II 2GD				[21]	**-EX4**		

[11] K2 Not with K3, K6
[12] K6 Not with K3
[13] K3 Not with K5
[14] S6 Not with S10, S1
[15] S10 Not with R3, R8, L
[16] L Not with MQ, MA, MH, S2, S6, S10
[17] R8 Not with MA, MH, S10, L, R3, A1, PPS
[18] R3 Not with R8
[19] A1 Not with MH, S6, S10, L, R8
[20] A6 Not with S10, L, MH, P, PPS, S6, R3, EX4
[21] EX4 Not with S6, S10

Ordering data – Modular product system

Ordering table

Size		8	10	12	16	20	25	32	40	Conditions	Code	Enter code
Module no.		**8150747**	**8149443**	**8149444**	**8149445**	**8149446**	**8149447**	**8149448**	**8149449**			
Function		Standards-based cylinder, double-acting, based on ISO 6432									**DSNU**	DSNU
Piston ⌀	[mm]	8	10	12	16	20	25	32	40		**-...**	
Stroke	[mm]	1 ... 100		1 ... 200		1 ... 320	1 ... 500			[1]	**-...**	
Cushioning		Elastic cushioning rings/plates at both ends									**-P**	
		–	–	Pneumatic cushioning, adjustable at both ends							**-PPV**	
		–	–	–	Pneumatic cushioning, self-adjusting						**-PPS**	
Position sensing		Via proximity switch									**-A**	-A
Special material properties		Recommended for production facilities for manufacturing lithium-ion batteries								[2]	**-F1A**	
Cylinder end cap		Standard										
		Lateral supply port, short end cap									**-MQ**	
		Axial supply port, short end cap								[3]	**-MA**	
Piston rod type		Piston rod at one end										
		Through piston rod								[4]	**-S2**	
Stroke adjustment, advancing	[mm]	0 ... 15		–						[5]	**-15KE**	
	[mm]	–		0 ... 25						[6]	**-25KE**	
	[mm]	–							0 ... 50	[7]	**-50KE**	

[1] -... Longer strokes on request
[2] F1A With A only
[3] MA Not with PPV, PPS
[4] S2 Not with MQ, MA
[5] 15KE Not with MQ, MA, S2
[6] 25KE Not with MQ, MA, S2
With piston diameter 20, 25: stroke only up to 250 mm
[7] 50KE Not with MQ, MA, S2

Note

Cylinders with position sensing require a minimum stroke of 10 mm to ensure reliable sensing.
Longer strokes on request

Ordering data – Modular product system

Ordering table

Size		8	10	12	16	20	25	32	40	Conditions	Code		Enter code
Extended male thread		Extended male piston rod thread											
	[mm]	1 ... 15		1 ... 20		1 ... 25	1 ... 35			[8]	**-...K2**		
Shortened male thread		Shortened male piston rod thread											
	[mm]	1 ... 4				1 .. 8				[9]	**-...K6**		
Female thread		Piston rod with female thread											
		–	–	–	–	(M4)	(M6)		(M8)		**-K3**		
Special thread		Special piston rod thread											
		–	–	–	–	–	M10		M12	[10]	**-"..."K5**		
Extended piston rod at one end		Piston rod extended at one end											
	[mm]	1 ... 50		1 ... 100		1 ... 110	1 ... 150	1 ... 500			**-...K8**		

[8] K2 Not with K3
[9] K6 Not with K2, K3
[10] K5 Not with K3

Datasheet

P cushioning

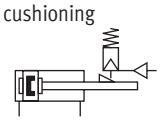

PPV cushioning

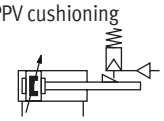

PPS cushioning

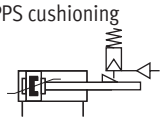

Diameter
8 ... 25 mm
ISO 6432

Diameter
32 ... 63 mm

Stroke length
1 ... 500 mm

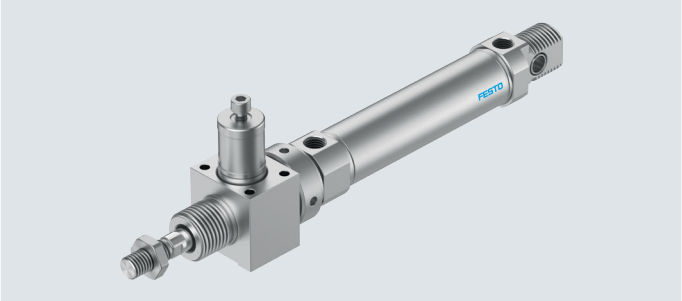

Note
Additional measures are required for use in safety-related applications; in Europe, for example, the standards listed under the EC Machinery Directive must be observed.
Without additional measures in accordance with legally specified minimum requirements, the product is not suitable as a safety-oriented component in control systems.

General technical data										
Piston ⌀	8	10	12	16	20	25	32	40	50	63
Based on standard	ISO 6432						–			
Pneumatic connection	M5	M5	M5	M5	G1/8	G1/8	G1/8	G1/4	G1/4	G3/8
Piston rod thread	M4	M4	M6	M6	M8	M10x1.25	M10x1.25	M12x1.25	M16x1.5	M16x1.5
Stroke1) [mm]	1 ... 100		1 ... 200		1 ... 320	1 ... 500				
Design	Piston/piston rod/cylinder barrel									
Cushioning										
DSNU...-P	Elastic cushioning rings/plates at both ends									
DSNU-...-PPV	–		Cushioning, adjustable at both ends							
DSNU-...-PPS	–			Cushioning, self-adjusting at both ends						
Cushioning length										
DSNU-...-PPV [mm]	–		9	12	15	17	14	18	20	21
DSNU-...-PPS [mm]	–			12	15	17	14	18	20	21
Position sensing	Via proximity switch									
Type of mounting	With through-hole									
	With accessories									
Mounting position	Any									
Holding force of the clamping unit [N]	80	80	180	180	350	350	600	1000	1400	2000
Axial backlash under load [mm]	0.2		0.3			0.5			0.8	
Pneumatic connection on clamping unit	M5							G1/8		

1) Cylinders with position sensing require a minimum stroke of 10 mm to ensure reliable sensing.
Longer strokes on request.

Datasheet

Operating and environmental conditions		
Operating medium		Compressed air to ISO 8573-1:2010 [7:4:4]
Note on the operating/ pilot medium		Lubricated operation possible (in which case lubricated operation will always be required)
Operating pressure[1]	[MPa]	0.3 ... 1
	[bar]	3 ... 10
Ambient temperature	[°C]	–10 ... +80
Corrosion resistance class CRC[2]		
DSNU-...		2 - Moderate corrosion stress
DSNU...-R3		3 - High corrosion stress

1) With variant S2 (through piston rod) or variant KE (stroke adjustment), the minimum operating pressure may increase slightly after an idle period of > 24 hours.
2) More information www.festo.com/x/topic/crc

Forces [N] and impact energy [J]										
Piston ⌀	8	10	12	16	20	25	32	40	50	63
Theoretical force at 0.6 MPa (6 bar), advancing	30	47	68	121	189	295	483	753	1178	1870
Theoretical force at 0.6 MPa (6 bar), retracting	23	40	51	104	158	247	415	633	990	1682
Impact energy in the end positions for P cushioning1)										
DSNU-...	0.03	0.05	0.07	0.15	0.2	0.3	0.4	0.7	1	1.3
DSNU-...-KE	0.025	0.025	0.055	0.12	0.16	0.24	0.32	0.56	0.8	1

1) The values are reduced by approx. 50% at an ambient temperature of 80 °C

Permissible impact velocity:

$$V = \sqrt{\frac{2 \times E}{m_1 + m_2}}$$

Maximum permissible mass:

$$m_2 = \frac{2 \times E}{v^2} - m_1$$

V	Perm. impact velocity
E	Max. impact energy
m1	Moving mass (drive)
m2	Moving effective load

Weight [g]											
Piston ⌀		8	10	12	16	20	25	32	40	50	63
DSNU-...											
Product weight with 0 mm stroke		97.6	100.3	193	207.9	393.8	456	711.5	1287	2059	2556
Additional weight per 10 mm stroke		2.4	2.7	4	4.6	7.2	11	15.5	24	40	44
Moving mass with 0 mm stroke		7.5	8.5	18.5	23	44	71	121	230	413	459
Moving mass per 10 mm stroke		1	1	2	2	4	6	9	16	25	25
DSNU-...-S2											
Moving mass with 0 mm stroke		12	12.5	30	34.5	70	113	182	363	638	701
Moving mass per 10 mm stroke		2	2	4	4	8	12	18	32	50	50
DSNU-...-KE											
Moving mass with 0 mm stroke	[15KE]	17	17.5	–	–	–	–	–	–	–	–
	[25KE]	–	–	46	50.5	99	142	251	469	839	902
	[50KE]	–	–	–	–	–	–	–	491	918	981
Moving mass per 10 mm stroke		2	2	4	4	8	12	18	32	50	50

Datasheet

Average piston speed v as a function of effective load m in combination with cushioning PPS

Piston Ø 16

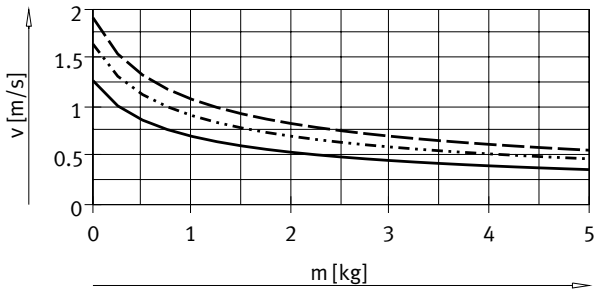

DSNU-16-50
DSNU-16-100
DSNU-16-200

Piston Ø 20

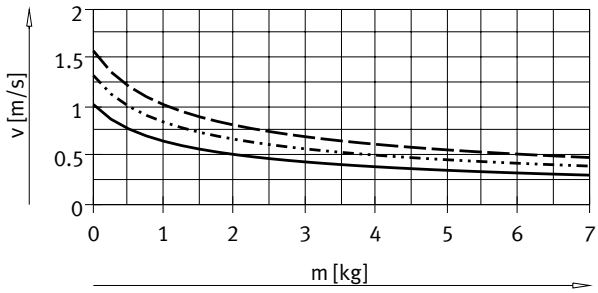

DSNU-20-50
DSNU-20-100
DSNU-20-200

Piston Ø 25

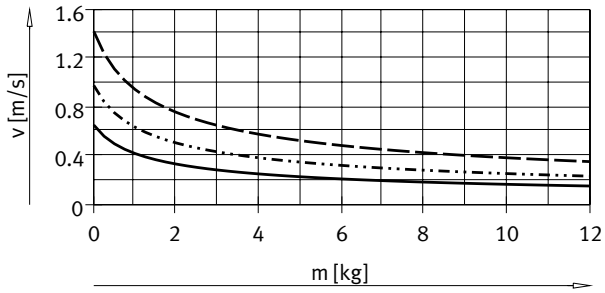

DSNU-25-50
DSNU-25-100
DSNU-25-200

Piston Ø 32

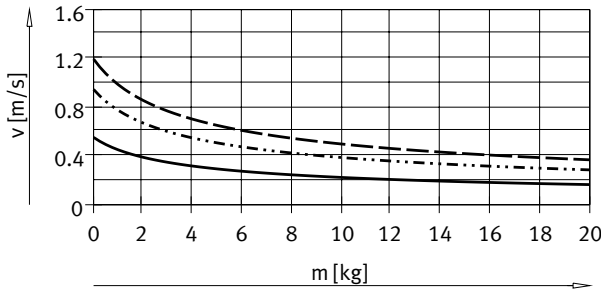

DSNU-32-50
DSNU-32-100
DSNU-32-200

Piston Ø 40

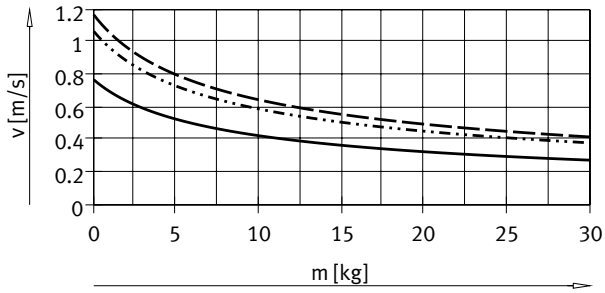

DSNU-40-50
DSNU-40-100
DSNU-40-200

Piston Ø 50

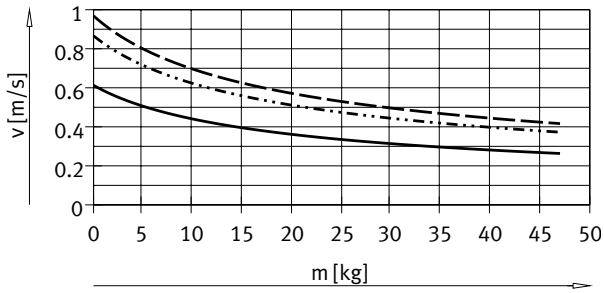

DSNU-50-50
DSNU-50-100
DSNU-50-200

Datasheet

Average piston speed v as a function of effective load m in combination with cushioning PPS

Piston ⌀ 63

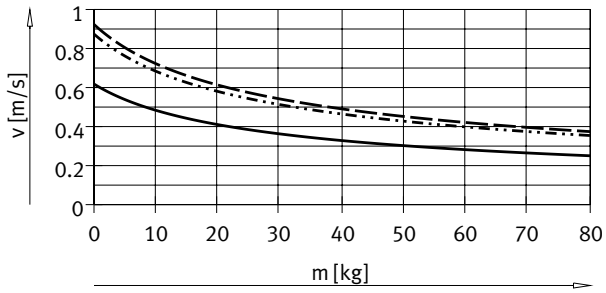

DSNU-63-50
DSNU-63-100
DSNU-63-200

Note:

Engineering software for
P cushioning
PPV cushioning
PPS cushioning
➔ https://www.festo.com/x/pneumatic-sizing

Average piston speed
= Stroke/movement time

Max. transverse force Fq as a function of projection l

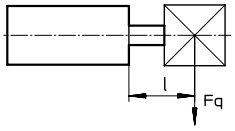

DSNU-...

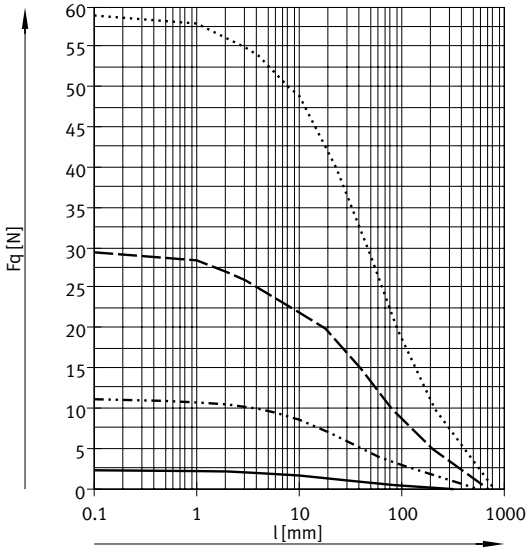

DSNU-8/10
DSNU-12/16
DSNU-20
DSNU-25

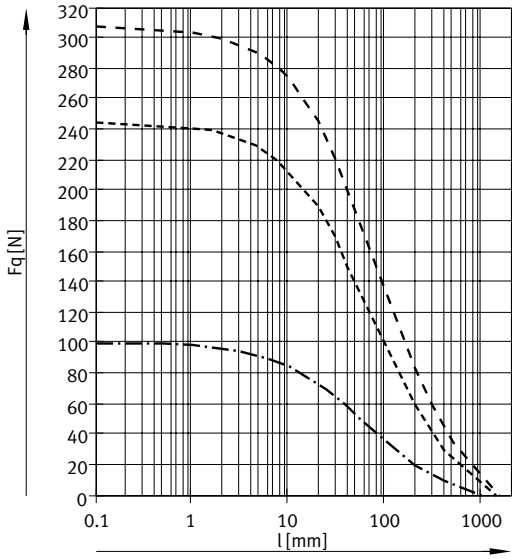

DSNU-32
DSNU-40
DSNU-50/63

Datasheet

Max. transverse force Fq as a function of projection l

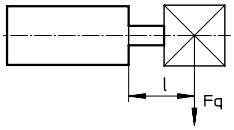

DSNU-...-S2 – Through piston rod

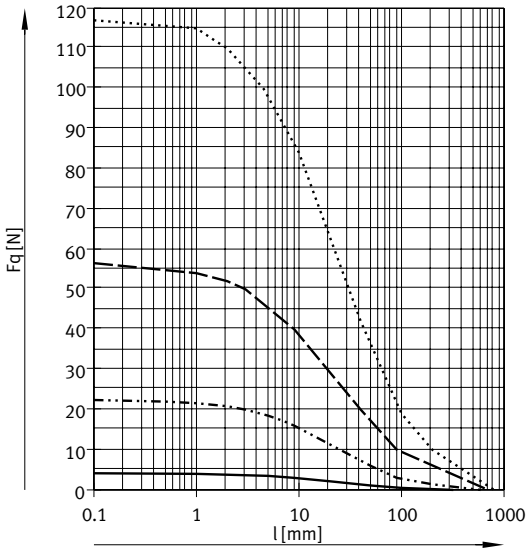

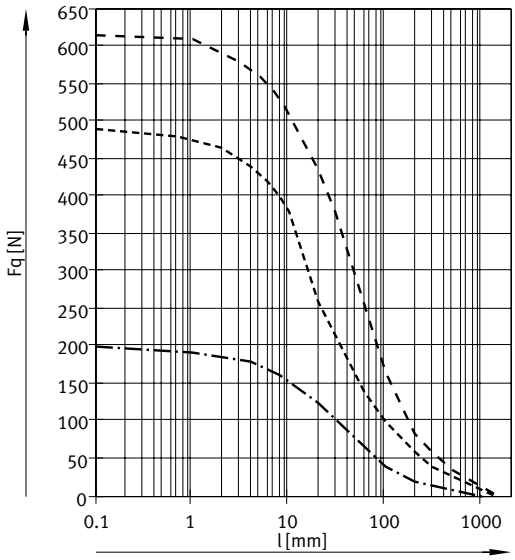

- DSNU-8/10
- DSNU-12/16
- DSNU-20
- DSNU-25
- DSNU-32
- DSNU-40
- DSNU-50/63

Datasheet

Materials

Sectional view

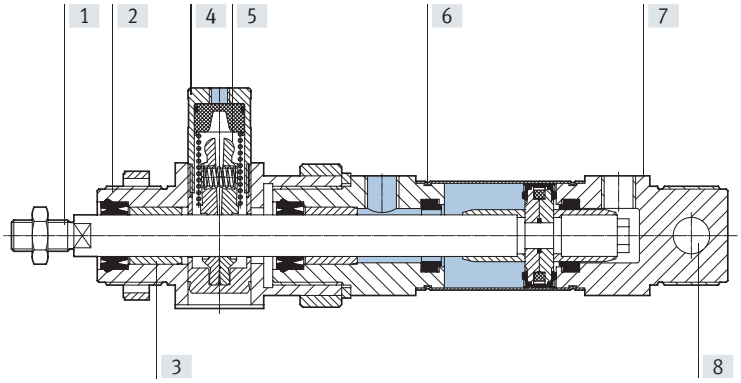

Round cylinder		
[1]	Piston rod	
	DSNU-...	High-alloy steel
	DSNU-...-R3	High-alloy stainless steel
[2]	Bearing cap	Anodised aluminium
[3]	Piston rod bearing	Sintered bronze
[4]	Housing, clamping unit	Wrought aluminium alloy
[5]	Clamping jaws	Brass
[6]	Cylinder barrel	High-alloy stainless steel
[7]	End cap	Anodised aluminium
[8]	Swivel bearing	Polymer
–	Piston, clamping unit	POM
	Spring	Spring steel
	Piston rod wiper seal	TPE-U(PU)
	Stroke adjustment DSNU-...-KE	
	Stop element	PE-UHMW
	Threaded coupling	Anodised aluminium
	LABS (PWIS) conformity	VDMA24364-B1/B2-L
	Cleanroom class	Class 6 to ISO 14644-1
	Note on materials	RoHs-compliant

Datasheet

Dimensions Download CAD data ➔ www.festo.com

DSNU-8 ... 25

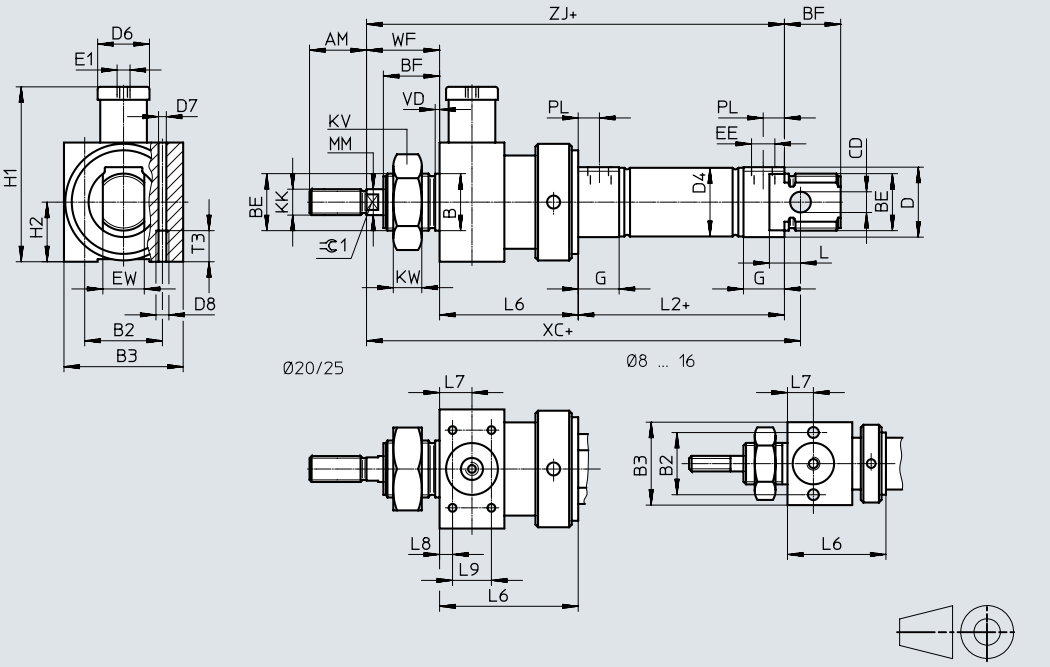

Note

Piston rod nut is not included in the scope of delivery for diameter 8 ... 20.

\+ = plus stroke length

⌀ [mm]	AM	B ⌀ h8	B2	B3	BE	BF	CD ⌀ H9	D ⌀	D4 ⌀	D6 ⌀	D7 ⌀	D8
8	12	12	19.5	27	M12x1.25	12	4	16	9.3	12	4.2	M5
10									11.3			
12	16	16	24	32	M16x1.5	17	6	20	13.3	16		
16									17.3			
20	20	22	27	36	M22x1.5	20	8	30	21.3	20		
25	22					22			26.5			

⌀ [mm]	E1	EE	EW	G	H1	H2	KK	KV	KW	MM ⌀	L	L2
8	M5	M5	8	10	34.5	13.5	M4	19	6	4	6	46
10												
12			12		41	16	M6	24	8	6	9	50
16												56
20		G1/8	16	16	62.5	18	M8	32	11	8	12	68
25							M10x1.25			10		69.5

⌀ [mm]	L6	L7	L8	L9	T3	PL	VD	WF ±1.2	XC ±1	ZJ	⌀1
8	29 ±0.65	8	–	–	11	6	2	16	93	91	–
10			–	–							–
12	38 ±0.75	10	–	–				22	113	110	5
16			–	–					120	116	
20	47 ±0.75	13	4.5	20		8.2		24	142	139	7
25	48 ±0.75							28	152	145.5	9

Datasheet

Dimensions Download CAD data ➔ www.festo.com

DSNU-8 ... 25
S2 – Through piston rod

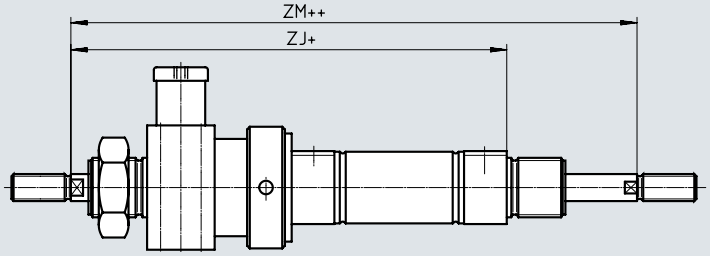

+ = plus stroke length
++ = plus 2x stroke length

Note

The thread types at both piston rod ends are identical. The clamping unit is mounted at only one end.

In combination with variant Q (➔ page 46) the right piston rod is square, the left piston rod round. The clamping unit is mounted on the left round piston rod.

In combination with variant K8 the piston rod extension is on the right piston rod only. The clamping unit is mounted on the left piston rod that is not extended.

In combination with variant K8 and Q, the piston rod extension is on the right, square piston rod only.

KE – Stroke adjustment

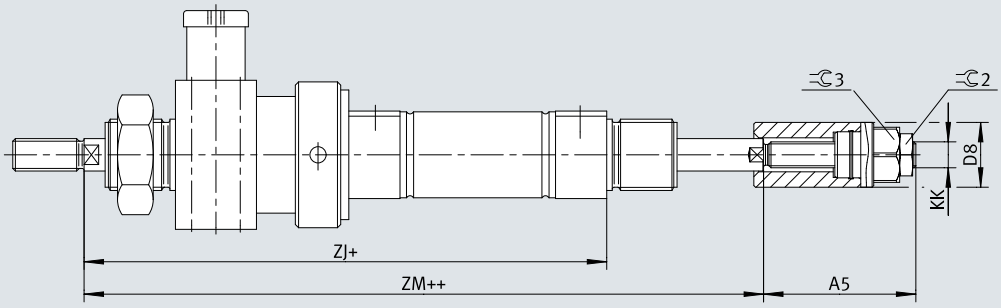

+ = plus stroke length
++ = plus 2x stroke length

ø [mm]	A5 DSNU-... -15KE	A5 DSNU-... -25KE	D8 ø	KK	ZJ	ZM	2	3
8	27.5	–	12	M4	91	107	7	10
10								
12	–	43	15	M6	110	132	10	13
16					116	138		
20		47	20	M8	139	163	13	17
25				M10x1.25	145.5	173.5		

Datasheet

Dimensions Download CAD data ➔ www.festo.com

DSNU-32 ... 63

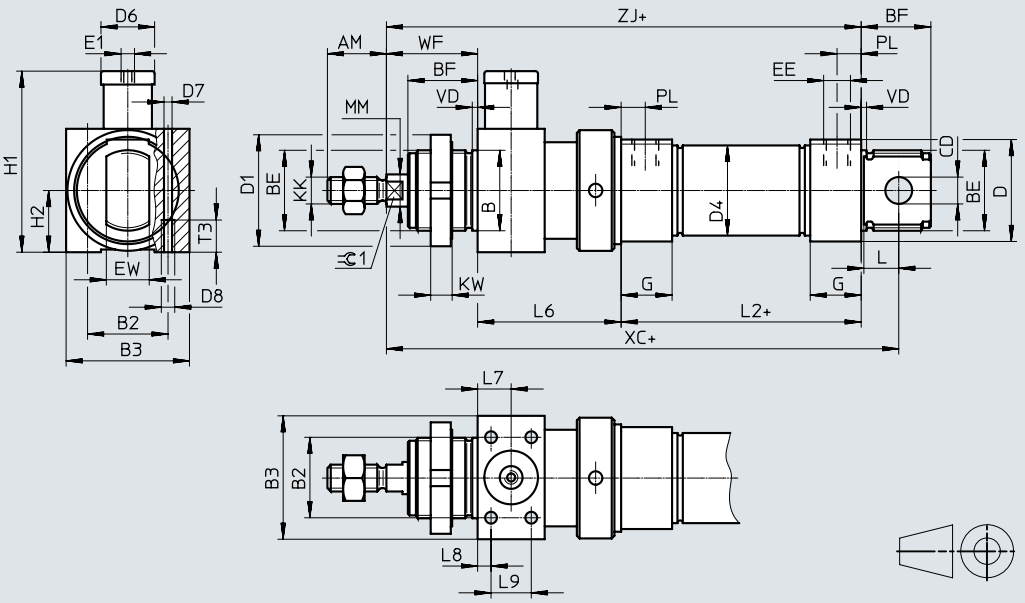

\+ = plus stroke length

⌀ [mm]	AM	B ⌀ h9	B2	B3	BE	BF	CD ⌀ H9	D ⌀	D1 ⌀	D4 ⌀	D6 ⌀	D7 ⌀
32	22	30	30	46	M30x1.5	26	10	41	42	33.6	20	4.4
40	24	38	36	56	M38x1.5	30	12	49	50	41.6	24	6.8
50	32	45	50	65	M45x1.5	33	16	57	60	52.4	30	8.5
63			54	72	M45x1.5			70		65.4	38	

⌀ [mm]	D8	E1	EE	EW	G	H1	H2	KK	KW	MM ⌀ f8	L	L2
32	M5	M5	G1/8	16	19	67.5	23	M10x1.25	8	12	13	69.5
40	M8	G1/8	G1/4	18	25	89	28	M12x1.25	10	16	15	84.6
50	M10	G1/8		21		107.5	32.5	M16x1.5		20	16	86.2
63		G1/8	G3/8		28	121.5	36					94.2

⌀ [mm]	L6 ±0.75	L7	L8	L9	T3	PL	VD	WF	XC ±1	ZJ	⌀1
32	55	12.5	5	15	12	9	2	34	172.5	158.5	10
40	69	17	7	20	18	12	3	39	208.6	192.6	13
50	78	20		26	20			44	225.2	208.2	17
63	86	24	8	32	21	13		45	242.2	225.2	

Datasheet

Dimensions Download CAD data ➔ www.festo.com

DSNU-32 ... 63
S2 – Through piston rod

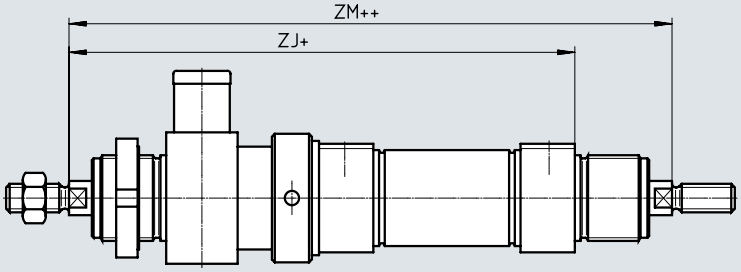

+ = plus stroke length
++ = plus 2x stroke length

Note

The thread types at both piston rod ends are identical. The clamping unit is mounted at only one end.

In combination with variant Q (➔ page 46) the right piston rod is square, the left piston rod round. The clamping unit is mounted on the left round piston rod.

In combination with variant K8 the piston rod extension is on the right piston rod only. The clamping unit is mounted on the left piston rod that is not extended.

In combination with variant K8 and Q, the piston rod extension is on the right, square piston rod only.

KE – Stroke adjustment

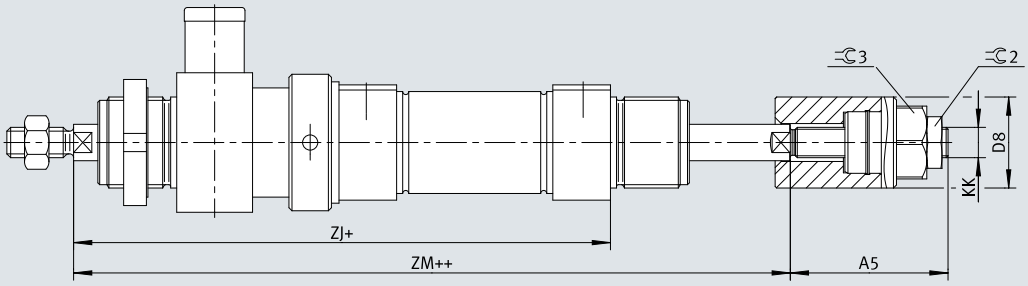

+ = plus stroke length
++ = plus 2x stroke length

ø [mm]	A5 DSNU-... -25KE	A5 DSNU-... -50KE	D8 ø	KK	ZJ	ZM	2	3
32	52	–	30	M10x1.25	158.5	192.5	17	24
40	56	81	35	M12x1.25	192.6	231.6	19	30
50	67	92	45	M16x1.5	208.2	252.2	24	
63					225.2	270.2		

Ordering data – Modular product system

Ordering table

Size		8	10	12	16	20	25	Conditions	Code		Enter code
Module no.		**193986**	**193987**	**193988**	**193989**	**193990**	**193991**				
Function		Round cylinder, double-acting, based on ISO 6432							**DSNU**		DSNU
Piston ⌀	[mm]	8	10	12	16	20	25		**-...**		
Stroke	[mm]	1 ... 100		1 ... 200		1 ... 320	1 ... 500	[1]	**-...**		
Cushioning		Elastic cushioning rings/plates at both ends							**-P**		
		–	–	Pneumatic cushioning, adjustable at both ends				[2]	**-PPV**		
		–	–	–	Pneumatic cushioning, self-adjusting at both ends			[3]	**-PPS**		
Position sensing		Via proximity switch						[4]	**-A**		-A
Cylinder end cap		Lateral supply port, short end cap						[5]	**-MQ**		
		Axial supply port, short end cap						[5]	**-MA**		
Piston rod type		Through piston rod							**-S2**		
Stroke adjustment,	[mm]	0 ... 15		–				[6]	**-15KE**		
advancing	[mm]	–		0 ... 25				[7]	**-25KE**		

[1] -... Longer strokes on request
[2] PPV Not with MA
[3] PPS Not with MA, MH and not with combination MQ-R3
[4] A Minimum stroke › 10 mm required for reliable sensing
[5] MQ, MA Not with S2
[6] 15KE Not with MQ, MA, S2
[7] 25KE Not with MQ, MA, S2
With piston diameter 20, 25: stroke only up to 250 mm

Note

Cylinders with position sensing require a minimum stroke of 10 mm to ensure reliable sensing.
Longer strokes on request

Ordering data – Modular product system

Ordering table

Size		8	10	12	16	20	25	Conditions	Code		Enter code
Extended male thread		Extended male piston rod thread									
	[mm]	1 ... 15		1 ... 20		1 ... 25	1 ... 35	[8]	**-...K2**		
Shortened male thread		Shortened male piston rod thread									
	[mm]	1 ... 4				1 ... 8	1 ... 10	[9]	**-...K6**		
Female thread		Piston rod with female thread									
		–	–	–	–	(M4)	(M6)	[10]	**-K3**		
Special thread		Special piston rod thread									
		–	–	–	–	–	M10		**-"..."K5**		
Extended piston rod at one end		Piston rod extended at one end									
	[mm]	1 ... 50		1 ... 100		1 ... 110	1 ... 150		**...K8**		
Clamping unit		Attached							**-KP**		-KP

[8] K2 Not with K3, K6
[9] K6 Not with K3
[10] K3 Not with K5

Ordering data – Modular product system

Ordering table

Size		32	40	50	63	Conditions	Code		Enter code
Module no.		**193992**	**193993**	**193994**	**193995**				
Function		Double-acting round cylinder					**DSNU**		DSNU
Piston ⌀	[mm]	32	40	50	63		**-...**		
Stroke	[mm]	1 ... 500				[1]	**-...**		
Cushioning		Elastic cushioning rings/plates at both ends					**-P**		
		Pneumatic cushioning, adjustable at both ends				[2]	**-PPV**		
		Pneumatic cushioning, self-adjusting at both ends				[3]	**-PPS**		
Position sensing		Via proximity switch				[4]	**-A**		-A
Cylinder end cap		Lateral supply port, short end cap				[5]	**-MQ**		
		Axial supply port, short end cap				[5]	**-MA**		
Piston rod type		Through piston rod					**-S2**		
Stroke adjustment,	[mm]	0 ... 25				[6]	**-25KE**		
advancing	[mm]	–	0 ... 50			[7]	**-50KE**		

[1] -... Longer strokes on request
[2] PPV Not with MA
[3] PPS Not with MA, MH and not with combination MQ-R3
[4] A Minimum stroke › 10 mm required for reliable sensing
[5] MQ, MA Not with S2
[6] 25KE Not with MQ, MA, S2
With piston diameter 20, 25: stroke only up to 250 mm
[7] 50KE Not with MQ, MA, S2

Note

Cylinders with position sensing require a minimum stroke of 10 mm to ensure reliable sensing.
Longer strokes on request

Ordering data – Modular product system

Ordering table

Size		32	40	50	63	Conditions	Code		Enter code
Extended male thread		Extended male piston rod thread							
	[mm]	1 ... 35		1 ... 70		[8]	**-...K2**		
Shortened male thread		Shortened male piston rod thread							
	[mm]	1 ... 8		1 ... 10		[9]	**-...K6**		
Female thread		Piston rod with female thread							
		(M6)	(M8)	(M10)		[10]	**-K3**		
Special thread		Special piston rod thread							
		M10	M12	M16			**-"..."K5**		
Extended piston rod at one end		Piston rod extended at one end							
	[mm]	1 ... 500					**...K8**		
Clamping unit		Attached					**-KP**		-KP

[8] K2 Not with K3, K6
[9] K6 Not with K3
[10] K3 Not with K5

Datasheet

P cushioning

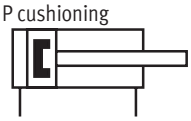

PPV cushioning

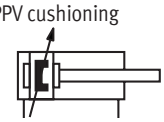

- Ø - Diameter
  12 ... 25 mm
  ISO 6432

- Ø - Diameter
  32 ... 63 mm

- | - Stroke length
  1 ... 500 mm

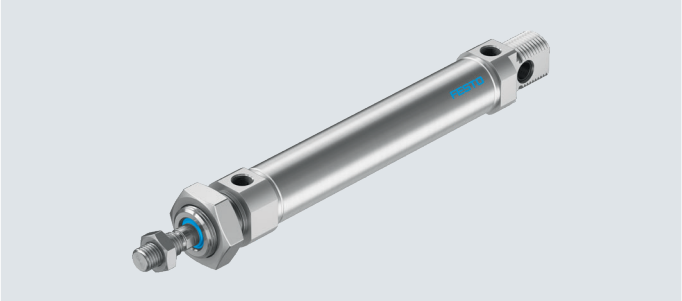

General technical data									
Piston Ø		12	16	20	25	32	40	50	63
Based on standard		ISO 6432				–			
Pneumatic connection		M5	M5	G1/8	G1/8	G1/8	G1/4	G1/4	G3/8
Piston rod thread		M6	M6	M8	M10x1.25	M10x1.25	M12x1.25	M16x1.5	M16x1.5
Stroke1)	[mm]	1 ... 160		1 ... 200	1 ... 250	1 ... 300	1 ... 400		1 ... 500
Design		Piston							
		Protected against rotation with square piston rod							
Max. torque at the piston rod	[Nm]	0.10	0.10	0.20	0.45	0.8	1.1	1.5	1.5
Cushioning									
DSNU-...-P		Elastic cushioning rings/plates at both ends	–			Elastic cushioning rings/plates at both ends			
DSNU-...-PPV		–	Pneumatic cushioning adjustable at both ends						
Cushioning length (PPV)	[mm]	–	12	15	17	14	18	20	21
Position sensing		Via proximity switch							
Type of mounting		With accessories							
Mounting position		Any							

1) Cylinders with position sensing require a minimum stroke of 10 mm to ensure reliable sensing.
Longer strokes on request.

Operating and environmental conditions									
		12	16	20	25	32	40	50	63
Operating medium		Compressed air to ISO 8573-1:2010 [7:4:4]							
Note on the operating/ pilot medium		Lubricated operation possible (in which case lubricated operation will always be required)							
Operating pressure[1]									
DSNU-...	[MPa]	0.15 ... 1[2]	0.1 ... 1						
	[bar]	1.5 ... 10[2]	1 ... 10						
DSNU-Q-...-S6	[MPa]	–				0.1 ... 0.8			
	[bar]	–				1 ... 8			
Ambient temperature3)									
DSNU-...	[°C]	–20 ... +80							
DSNU-Q-...-S6	[°C]	–				0 ... +120			
Corrosion resistance class CRC[4]									
DSNU-...		2 - Moderate corrosion stress							
DSNU-Q-...-R3		3 - High corrosion stress							

1) With variant S2 (through piston rod) or variant KE (stroke adjustment), the minimum operating pressure may increase slightly after an idle period of > 24 hours.
2) For DSNU-12-... -Q- PPV (pneumatic cushioning adjustable at both ends): 0.2 ... 1 MPa (2 ... 10 bar)
3) Note operating range of proximity switches
4) More information www.festo.com/x/topic/crc

Datasheet

ATEX[1]	
ATEX category for gas	II 2G
Type of ignition protection for gas	c T4
ATEX category for dust	II 2D
Type of (ignition) protection for dust	c 120°C
Explosion-proof ambient temperature	–20 °C <= Ta <= +60 °C
CE marking (see declaration of conformity)	To EU Explosion Protection Directive (ATEX)
UKCA marking (see declaration of conformity)	To UK explosion regulations
Explosion protection certification outside the EU	EPL Db (GB)
	EPL Gb (GB)

1) Note the ATEX certification of the accessories.

Forces [N] and impact energy [J]								
Piston ⌀	12	16	20	25	32	40	50	63
Theoretical force at 0.6 MPa (6 bar), advancing	68	121	189	295	483	753	1178	1870
Theoretical force at 0.6 MPa (6 bar), retracting	51	104	158	247	415	633	990	1682
Impact energy in the end positions for P cushioning1)								
DSNU-...	0.07	0.15	0.2	0.3	0.4	0.7	1	1.3
DSNU-...-S6	0.035	0.075	0.1	0.15	0.2	0.35	0.5	0.65
DSNU-...-KE	0.055	0.12	0.16	0.24	0.32	0.56	0.8	1

1) The values are reduced by approx. 50% at an ambient temperature of 80 °C

Permissible impact velocity: $$V = \sqrt{\frac{2 \times E}{m_1 + m_2}}$$

Maximum permissible mass: $$m_2 = \frac{2 \times E}{v^2} - m_1$$

V	Perm. impact velocity
E	Max. impact energy
m1	Moving mass (drive)
m2	Moving effective load

Weight [g]									
Piston ⌀		12	16	20	25	32	40	50	63
DSNU-...									
Product weight with 0 mm stroke		80	110	215	275	370.5	661	1087	1445
Additional weight per 10 mm stroke		4	4.6	7.2	11	15.5	24	40	44
Moving mass with 0 mm stroke		18.5	23	44	71	121	230	413	459
Moving mass per 10 mm stroke		2	2	4	6	9	16	25	25
DSNU-...-S2									
Moving mass with 0 mm stroke		30	34.5	70	113	182	363	638	701
Moving mass per 10 mm stroke		4	4	8	12	18	32	50	50
DSNU-...-KE									
Moving mass with 0 mm stroke	[15KE]	–	–	–	–	–	–	–	–
	[25KE]	46	50.5	99	142	251	469	839	902
	[50KE]	–	–	–	–	–	491	918	981
Moving mass per 10 mm stroke		4	4	8	12	18	32	50	50

Datasheet

Materials

Sectional view

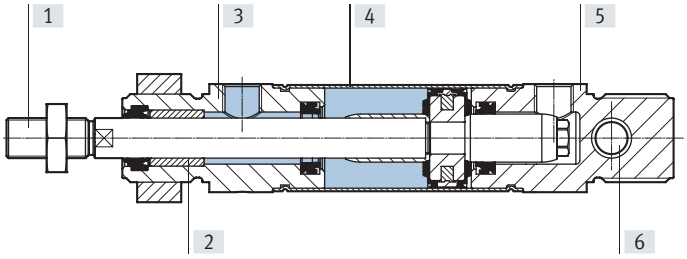

Datasheet

Round cylinder		
[1]	Piston rod	
	DSNU-...	High-alloy steel
	DSNU-...-R3	High-alloy stainless steel
[2]	Piston rod bearing	Sintered bronze
[3]	Bearing cap	Anodised aluminium
[4]	Cylinder barrel	High-alloy stainless steel
[5]	End cap	Anodised aluminium
[6]	Swivel bearing	Polymer
–	Piston rod wiper seal	TPE-U(PU)
	Stroke adjustment DSNU-...-KE	
	Stop element	PE-UHMW
	Threaded coupling	Aluminium
	LABS (PWIS) conformity	VDMA24364-B1/B2-L
	Cleanroom class	Class 6 to ISO 14644-1
	Note on materials	RoHs-compliant

Datasheet

Dimensions Download CAD data ➔ www.festo.com

DSNU-12 ... 25

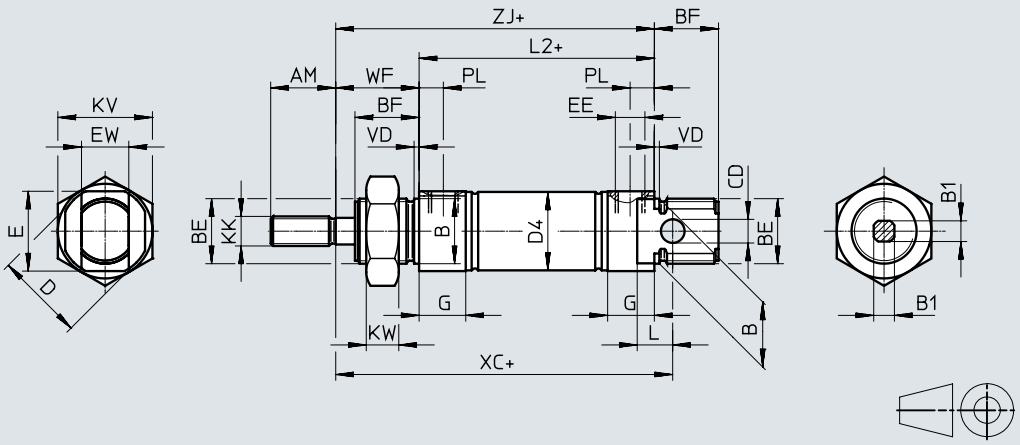

Note

Piston rod nut is not included in the scope of delivery for diameter 8 ... 20.

\+ = plus stroke length

ø [mm]	AM	B ø h8	B1	BE	BF	CD ø H9	D ø	D4 ø	E	EE	EW
12	16	16	5.5	M16x1.5	17	6	20	13.3	18	M5	12
16								17.3			
20	20	22	7	M22x1.5	20	8	30	21.3	26	G1/8	16
25	22		9		22			26.5	27		

ø [mm]	G	KK	KV	KW	L	L2	PL	VD	WF ±1.2	XC ±1	ZJ
12	10	M6	24	8	9	50	6	2	22	75	72
16						56				82	78
20	16	M8	32	11	12	68	8.2		24	95	92
25		M10x1.25				69.5			28	104	97.5

Datasheet

Dimensions Download CAD data ➔ www.festo.com

S2 – Through piston rod

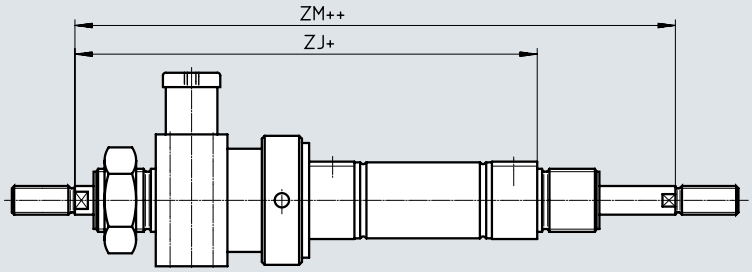

Note

The thread types at both piston rod ends are identical. The clamping unit is mounted at only one end. In combination with variant Q, the right piston rod is square, the left piston rod round. The clamping unit is mounted on the left round piston rod.

\+ = plus stroke length
++ = plus 2x stroke length

KE – Stroke adjustment

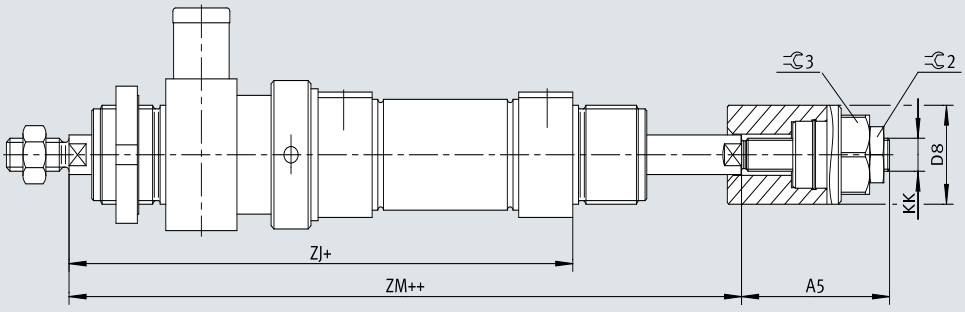

\+ = plus stroke length
++ = plus 2x stroke length

ø [mm]	A5 DSNU-... -15KE	A5 DSNU-... -25KE	D8 ø	KK	ZJ	ZM	2	3
12	–	43	15	M6	110	132	10	13
16					116	138		
20		47	20	M8	139	163	13	17
25				M10x1.25	145.5	173.5		

Datasheet

Dimensions Download CAD data ➔ www.festo.com

DSNU-32 ... 63

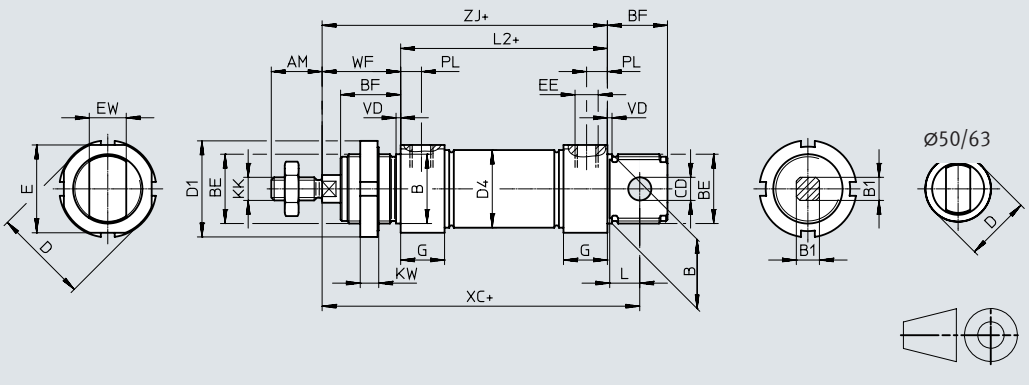

+ = plus stroke length

Ø [mm]	AM	B Ø h8	B1	BE	BF	CD Ø H9	D Ø	D1 Ø	D4 Ø	E	EE	EW
32	22	30	10	M30x1.5	26	10	41	42	33.6	38	G1/8	16
40	24	38	12	M38x1.5	30	12	49	50	41.6	45	G1/4	18
50	32	45	16	M45x1.5	33	16	57	60	52.4	–	G1/4	21
63	32	45	16	M45x1.5	33	16	70	60	65.4	–	G3/8	21

Ø **[mm]**	G	KK	KW	L	L2	PL	VD	WF ±1.2	XC ±1	ZJ
32	19	M10x1.25	8	13	69.5	9	2	34	117.5	103.5
40	25	M12x1.25	10	15	84.6	12	3	39	139.6	123.6
50	25	M16x1.5	10	16	86.2	12	3	44	147.2	130.2
63	28	M16x1.5	10	16	94.2	13	3	45	156.2	139.2

Datasheet

Dimensions Download CAD data ➔ www.festo.com

S2 – Through piston rod

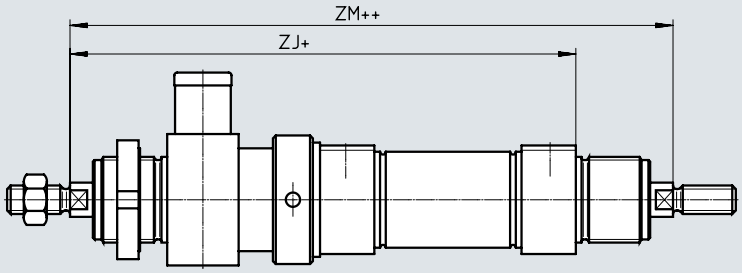

Note

The thread types at both piston rod ends are identical. The clamping unit is mounted at only one end. In combination with variant Q, the right piston rod is square, the left piston rod round. The clamping unit is mounted on the left round piston rod.

\+ = plus stroke length
++ = plus 2x stroke length

KE – Stroke adjustment

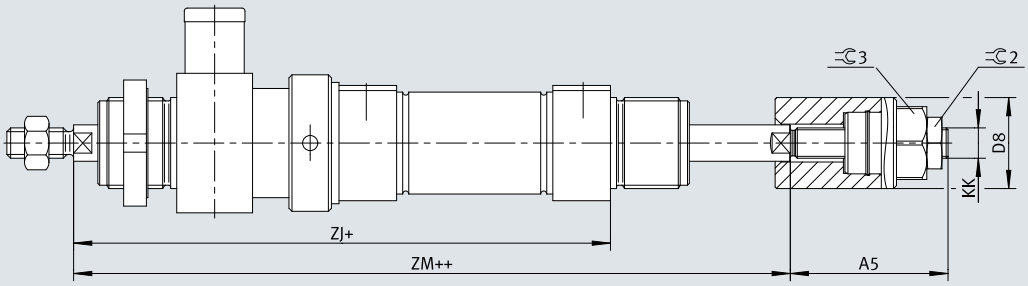

\+ = plus stroke length
++ = plus 2x stroke length

ø [mm]	A5 DSNU-... -25KE	A5 DSNU-... -50KE	D8 ø	KK	ZJ	ZM	2	3
32	52	–	30	M10x1.25	158.5	192.5	17	24
40	56	81	35	M12x1.25	192.6	231.6	19	30
50	67	92	45	M16x1.5	208.2	252.2	24	
63					225.2	270.2		

Ordering data – Modular product system

Ordering table

Size		12	16	20	25	Conditions	Code		Enter code
Module no.		**193988**	**193989**	**193990**	**193991**				
Function		Round cylinder, double-acting, based on ISO 6432					**DSNU**		DSNU
Piston ⌀	[mm]	12	16	20	25		**-...**		
Stroke	[mm]	1 ... 160		1 ... 200	1 ... 250	[1]	**-...**		
Cushioning		Elastic cushioning rings/plates at both ends	–	–	–		**-P**		
		–	Pneumatic cushioning, adjustable at both ends			[2]	**-PPV**		
Position sensing		Via proximity switch				[3]	**-A**		-A
Cylinder end cap		Lateral supply port, short end cap				[4]	**-MQ**		
		Axial supply port, short end cap	–	–	–	[4]	**-MA**		
		–	With mounting flange at front (direct mounting), bearing cap			[5]	**-MH**		
Protection against rotation		Square piston rod					**-Q**		-Q
Piston rod type		Through piston rod					**-S2**		
Stroke adjustment, advancing	[mm]	0 ... 25				[6]	**-25KE**		

[1] -... Longer strokes on request
[2] PPV Not with MA
[3] A Minimum stroke › 10 mm required for reliable sensing
[4] MQ, MA Not with S2
[5] MH Not with combination Q-R3
[6] 25KE Not with MQ, MA, S2, EX4
With piston diameter 20, 25: stroke only up to 250 mm

Note

The bellows kit DADB must not be used in combination with the variant Q.

Note

Cylinders with position sensing require a minimum stroke of 10 mm to ensure reliable sensing.
Longer strokes on request

Ordering data – Modular product system

Ordering table

Size		12	16	20	25	Conditions	Code		Enter code
Extended male thread		Extended male piston rod thread							
	[mm]	1 ... 20		1 ... 25	1 ... 35	[7]	**-...K2**		
Shortened male thread		Shortened male piston rod thread							
	[mm]	1 ... 4		1 ... 8	1 ... 10	[8]	**-...K6**		
Female thread		Piston rod with female thread							
		–	–	(M4)	(M6)	[9]	**-K3**		
Special thread		Special piston rod thread							
		–	–	–	M10		**-“...”K5**		
Extended piston rod at one end		Piston rod extended at one end							
	[mm]	1 ... 100		1 ... 110	1 ... 150		**...K8**		
Clamping unit		Attached				[10]	**-KP**		
Corrosion protection		–	High corrosion protection				**-R3**		
EU certification		II 2GD				[11]	**-EX4**		

[7] K2 Not with K3, K6
[8] K6 Not with K3
[9] K3 Not with K5
[10] KP Only with S2. Not with R3
[11] EX4 Not with KP

Ordering data – Modular product system

Ordering table

Size		32	40	50	63	Conditions	Code	Enter code
Module no.		**193992**	**193993**	**193994**	**193995**			
Function		Double-acting round cylinder					**DSNU**	DSNU
Piston ⌀	[mm]	32	40	50	63		**-...**	
Stroke	[mm]	1 ... 300	1 ... 400		1 ... 500	[1]	**-...**	
Cushioning		Elastic cushioning rings/plates at both ends					**-P**	
		Pneumatic cushioning adjustable at both ends				[2]	**-PPV**	
Position sensing		Via proximity switch				[3]	**-A**	-A
Cylinder end cap		Lateral supply port, short end cap				[4]	**-MQ**	
		Axial supply port, short end cap				[4]	**-MA**	
		Mounting flange at the front (direct mounting), bearing cap				[5]	**-MH**	
Protection against rotation		Square piston rod					**-Q**	-Q
Piston rod type		Through piston rod					**-S2**	
Stroke adjustment, advancing	[mm]	0 ... 25				[6]	**-25KE**	
	[mm]	–	0 ... 50			[6]	**-50KE**	

[1] -... Longer strokes on request
[2] PPV Not with MA
[3] A Minimum stroke › 10 mm required for reliable sensing
[4] MQ, MA Not with S2
[5] MH Not with combinations: Q-R3, S6-R3. Not with KP
[6] KE Not with MQ, MA, S2, S6, EX4

Note

The bellows kit DADB must not be used in combination with the variant Q.

Note

Cylinders with position sensing require a minimum stroke of 10 mm to ensure reliable sensing.
Longer strokes on request

Ordering data – Modular product system

Ordering table

Size		32	40	50	63	Conditions	Code		Enter code
Extended male thread		Extended male piston rod thread							
	[mm]	1 ... 35		1 ... 70		[7]	**-...K2**		
Shortened male thread		Shortened male piston rod thread							
	[mm]	1 ... 8		1 ... 10		[8]	**-...K6**		
Female thread		Piston rod with female thread							
		(M6)	(M8)	(M10)		[9]	**-K3**		
Special thread		Special piston rod thread							
		M10	M12	M16			**-"..."K5**		
Extended piston rod at one end		Piston rod extended at one end							
	[mm]	1 ... 500					**...K8**		
Clamping unit		Attached				[10]	**-KP**		
Temperature resistance		Heat-resistant seals max. 120 °C					**-S6**		
Corrosion protection		High corrosion protection					**-R3**		
EU certification		II 2GD				[11]	**-EX4**		

[7] K2 Not with K3, K6
[8] K6 Not with K
[9] K3 Not with K5
[10] KP Only with S2. Not with S6, R3
[11] EX4 Not with KP, S6

Accessories

Foot mounting HBN/CRHBN

Scope of delivery:
HBN/CRHBN-...x1: 1 foot
HBN/CRHBN-...x2: 2 feet and 1 nut

Material:
HBN: Galvanised steel
CRHBN: High-alloy stainless steel
RoHs-compliant

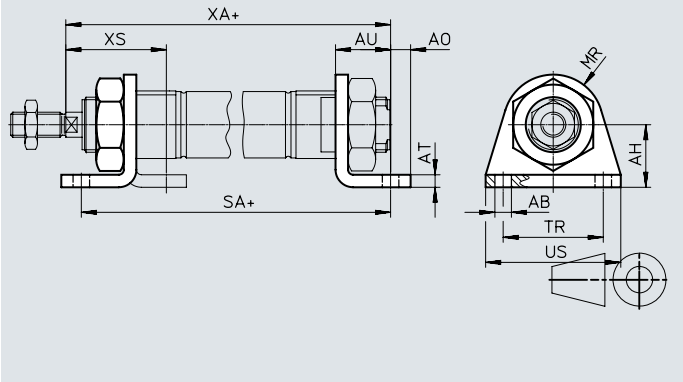

Dimensions and ordering data

+ = plus stroke length

For Ø [mm]	AB Ø	AH	AO	AT	AU	R1	SA	SA DSNU-KP	TR	US	XA	XA DSNU-KP	XS	XS DSNU-KP
8, 10	4.5	16	5	3	11	10	68	97	25	35	73	102	24	–
12	5.5	20	6	4	14	13	78	116	32	42	86	124	32	–
16	5.5	20	6	4	14	13	84	122	32	42	92	130	32	–
20	6.6	25	8	5	17	20	102	149	40	54	109	156	36	–
25	6.6	25	8	5	17	20	103.5	151.5	40	54	114.5	162.5	40	–

For Ø	Basic version				High corrosion protection			
[mm]	CRC[1]	Weight [g]	Part no.	Type	CRC[1]	Weight [g]	Part no.	Type
8, 10	1	22	**5123**	**HBN-8/10x1**	–	–	**–**	
	1	54	**5124**	**HBN-8/10x2**	–	–	**–**	
12, 16	1	43	**5125**	**HBN-12/16x1**	4	43	**161866**	**CRHBN-12/16x1**
	1	107	**5126**	**HBN-12/16x2**	4	107	**162999**	**CRHBN-12/16x2**
20, 25	1	95	**5127**	**HBN-20/25x1**	4	94	**161867**	**CRHBN-20/25x1**
	1	237	**5128**	**HBN-20/25x2**	4	236	**162998**	**CRHBN-20/25x2**

1) More information www.festo.com/x/topic/crc

Accessories

Foot mounting HBN/CRH

Material:
HBN: Galvanised steel
CRH: High-alloy stainless steel
RoHs-compliant

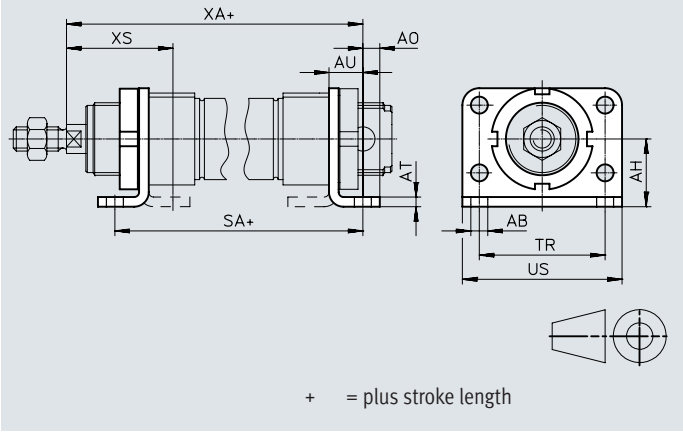

Dimensions and ordering data

For Ø [mm]	AB Ø	AH	AO	AT	AU	SA		TR	US	XA		XS	
							DSNU-KP				DSNU-KP		DSNU-KP
32	7	28	7	4	14	97.5	151	52	66	117.5	171	44	–
40	9	33	10	5	20	124.6	192.1	60	80	143.6	206.1	54	–
50	9	40	10	6	20	126.2	202.7	70	90	150.2	226.7	58	–
63	9	45	10	6	20	134.2	218.7	76	96	159.2	243.7	59	–

For Ø	Basic version				High corrosion protection			
[mm]	CRC[1)]	Weight [g]	Part no.	Type	CRC[1)]	Weight [g]	Part no.	Type
32	1	353	**195851**	**HBN-32x2**	4	353	**162951**	**CRH-32**
40	1	611	**195852**	**HBN-40x2**	4	611	**162952**	**CRH-40**
50	1	916	**195853**	**HBN-50x2**	4	916	**162953**	**CRH-50**
63	1	1066	**195854**	**HBN-63x2**	4	1066	**162954**	**CRH-63**

1) More information www.festo.com/x/topic/crc

Accessories

Flange mounting FBN/CRFBN

Material:
FBN: Galvanised steel
CRFBN: High-alloy stainless steel

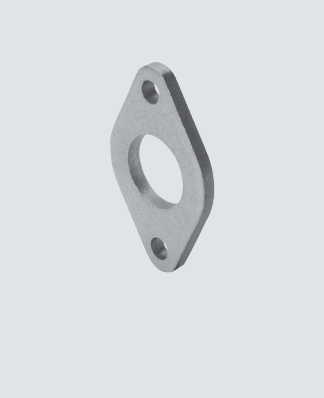

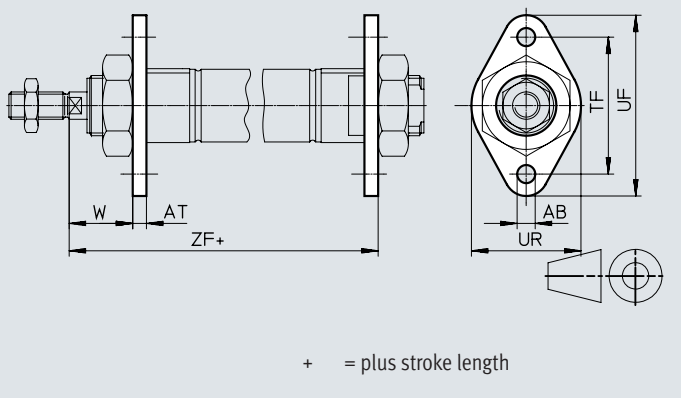

Dimensions and ordering data

For Ø [mm]	AB Ø	AT	TF	UF	UR	W	ZF	
								DSNU-KP
8, 10	4.5	3	30	40	25	13	65	94
12	5.5	4	40	53	30	18	76	114
16	5.5	4	40	53	30	18	82	120
20	6.6	5	50	66	40	19	97	144
25	6.6	5	50	66	40	23	102.5	150.5

For Ø	Basic version				High corrosion protection			
[mm]	CRC[1]	Weight [g]	Part no.	Type	CRC[1]	Weight [g]	Part no.	Type
8, 10	1	12	**5129**	**FBN-8/10**	–	–	**–**	**–**
12, 16	1	26	**5130**	**FBN-12/16**	4	26	**161864**	**CRFBN-12/16**
20, 25	1	52	**5131**	**FBN-20/25**	4	52	**161865**	**CRFBN-20/25**

1) More information www.festo.com/x/topic/crc

Accessories

Flange mounting FBN/CRFV

Material:
FBN: Galvanised steel
CRFV: High-alloy stainless steel
RoHs-compliant

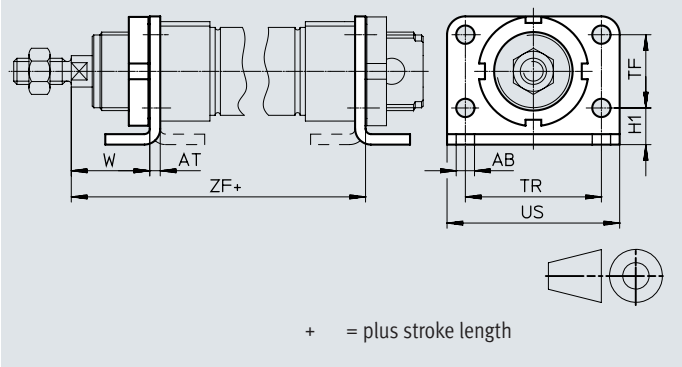

Dimensions and ordering data

For Ø [mm]	AB Ø	AT	H1	TF	TR	US	W ±1.2	ZF	
									DSNU-KP
32	7	4	14	28	52	66	30	107.5	161
40	9	5	18	30	60	80	29	128.6	191.1
50	9	6	20	40	70	90	38	136.2	212.6
63	9	6	20	50	76	96	39	145.2	229.7

For Ø	Basic version				High corrosion protection			
[mm]	CRC[1]	Weight [g]	Part no.	Type	CRC[1]	Weight [g]	Part no.	Type
32	1	103	**195855**	**FBN-32**	4	103	**161858**	**CRFV-32**
40	1	191	**195856**	**FBN-40**	4	191	**161859**	**CRFV-40**
50	1	292	**195857**	**FBN-50**	4	292	**161860**	**CRFV-50**
63	1	367	**195858**	**FBN-63**	4	367	**161861**	**CRFV-63**

1) More information www.festo.com/x/topic/crc

Accessories

Swivel mounting SBN

Material:
Retaining ring: Anodised wrought aluminium alloy
Bearing: Bronze
Screws: Galvanised steel
Bracket: Steel
Cannot be used on the bearing cap in combination with bellows kit DADB.

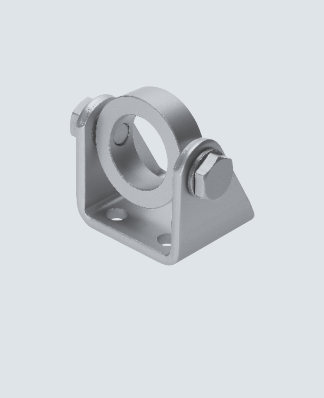

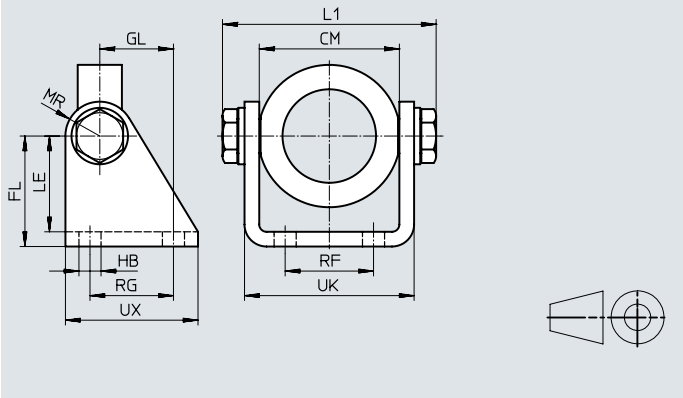

Dimensions and ordering data

For Ø [mm]	CM	FL	GL	HB	L1 max.	LE	MR	RF	RG	UK	UX	CRC[1]	Weight [g]	Part no.	Type
20/25	38.1+0.4	35	20	7	60.2	31	12	20	24	46.1	40	1	238	**539927**	**SBN-20/25**
32	46.1+0.2	40	27	9	72.2	35	13	28	30	56.1	50	1	361	**539924**	**SBN-32**
40	57.1+0.2	45	30	9	88.2	39	14	36	34	69.1	54	1	593	**539925**	**SBN-40**
50/63	70.1+0.4	50	34	9	102.2	44	16	42	35	82.1	65	1	894	**539926**	**SBN-50/63**

1) More information www.festo.com/x/topic/crc

Swivel mounting WBN

Material:
Galvanised steel
RoHs-compliant
Cannot be used on the bearing cap in combination with bellows kit DADB.

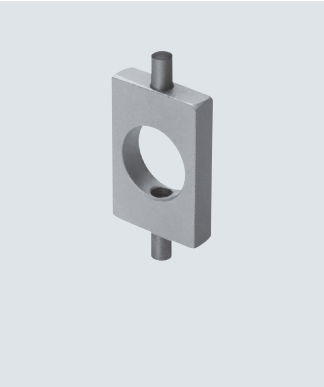

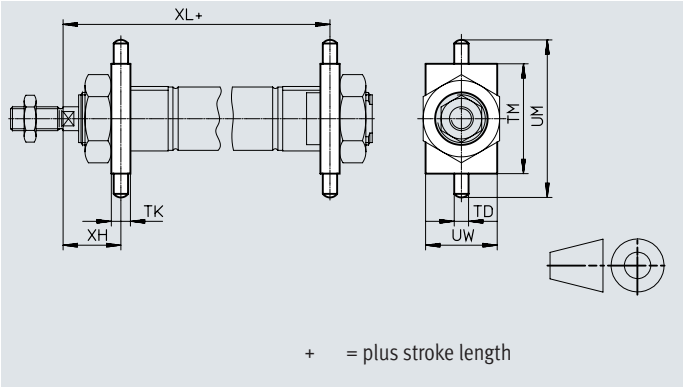

Dimensions and ordering data

For Ø [mm]	TD Ø –0.01/ –0.05	TK	TM	UM	UW	XH	XL	XL DSNU-KP	CRC[1]	Weight [g]	Part no.	Type
8, 10	4	6	26	38	20	13	65	94	1	20	**8608**	**WBN-8/10**
12	6	8	38	58	25	18	76	114	1	51	**8609**	**WBN-12/16**
16	6	8	38	58	25	18	82	120	1	51	**8609**	**WBN-12/16**
20	6	8	46	66	30	20	96	143	1	67	**8610**	**WBN-20/25**
25	6	8	46	66	30	24	101.5	149.5	1	67	**8610**	**WBN-20/25**
32	8	12	50	76	40	28	109.5	163	1	131	**195863**	**WBN-32**
40	10	15	60	92	50	31.5	126.1	193.6	1	238	**195864**	**WBN-40**
50	12	20	80	116	65	34	140.2	216.7	1	596	**195865**	**WBN-50/63**
63	12	20	80	116	65	35	149.2	233.7	1	596	**195865**	**WBN-50/63**

1) More information www.festo.com/x/topic/crc

Accessories

Clevis foot LBN/CRLBN

Material:
LBN: galvanised steel
CRLBN: High-alloy stainless steel
RoHs-compliant

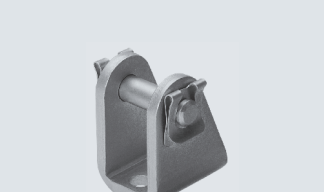

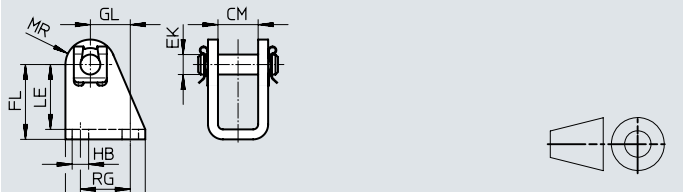

Dimensions and ordering data

For ⌀ [mm]	CM	EK ⌀	FL	GL	HB	LE	MR	RG	UX
8, 10	8.1	4	24 +0.3/–0.2	13.8	4.5	21.5	5	12.5	20
12, 16	12.1	6	27 +0.3/–0.2	13	5.5	24	7	15	25
20, 25	16.1	8	30 +0.4/–0.2	16	6.6	26	10	20	32
32	16.1	10	35 +0.4/–0.2	18.5	6.6	31	11	24	35
40	18.1	12	40 +0.4/–0.2	24.5	9	35	13	30	45
50, 63	21.1	16	45 +0.5/–0.2	28	9	39	14	34	50

For ⌀	Basic version				High corrosion protection			
[mm]	CRC[1]	Weight [g]	Part no.	Type	CRC[1]	Weight [g]	Part no.	Type
8, 10	1	20	**6057**	**LBN-8/10**	–	–	**–**	
12, 16	1	40	**6058**	**LBN-12/16**	4	39	**161862**	**CRLBN-12/16**
20, 25	1	84	**6059**	**LBN-20/25**	4	82	**161863**	**CRLBN-20/25**
32	1	110	**195860**	**LBN-32**	4	106	**195866**	**CRLBN-32**
40	1	191	**195861**	**LBN-40**	4	185	**195867**	**CRLBN-40**
50, 63	1	300	**195862**	**LBN-50/63**	4	283	**195868**	**CRLBN-50/63**

1) More information www.festo.com/x/topic/crc

Accessories

Ordering data – Piston rod attachments

Datasheets → Internet: piston rod attachment

Designation	For ⌀	Part no.	Type
Rod eye SGS			
	8	9253	SGS-M4
	10		
	12	9254	SGS-M6
	16		
	20	9255	SGS-M8
	25	9261	SGS-M10x1.25
	32		
	40	9262	SGS-M12x1.25
	50	9263	SGS-M16x1.5
	63		
Self-aligning rod coupler FK			
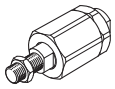	8	6528	FK-M4
	10		
	12	2061	FK-M6
	16		
	20	2062	FK-M8
	25	6140	FK-M10x1.25
	32		
	40	6141	FK-M12x1.25
	50	6142	FK-M16x1.5
	63		
Rod clevis SG			
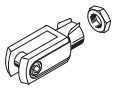	8	6532	SG-M4
	10		
	12	3110	SG-M6
	16		
	20	3111	SG-M8
	25	6144	SG-M10x1.25
	32		
	40	6145	SG-M12x1.25
	50	6146	SG-M16x1.5
	63		
Coupling piece KSZ			
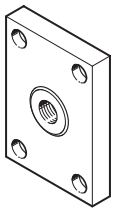	12	36123	KSZ-M6
	16		
	20	36124	KSZ-M8
	25	36125	KSZ-M10x1.25
	32		
	40	36126	KSZ-M12x1.25
	50	36127	KSZ-M16x1.5
	63		

Designation	For ⌀	Part no.	Type
Rod clevis SGA			
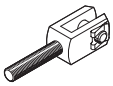	8	–	
	10		
	12		
	16		
	20		
	25		
	32	32954	SGA-M10x1.25
	40	10767	SGA-M12x1.25
	50	10768	SGA-M16x1.5
	63		
Self-aligning rod coupler DARP			
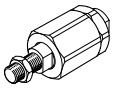	8	8170110	DARP-M4-F
	10		
	12	8170115	DARP-M6-F
	16		
	20	8170116	DARP-M8-F
	25	8170119	DARP-M10P-F
	32		
	40	8170120	DARP-M12P-F
	50	8170121	DARP-M16P-F
	63		
Coupling piece KSG			
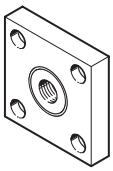	8	–	
	10		
	12		
	16		
	20		
	25	32963	KSG-M10x1.25
	32		
	40	32964	KSG-M12x1.25
	50	32965	KSG-M16x1.5
	63		
Hex nut MSK			
	16	189007	MSK-M16x1.5
	20	189009	MSK-M22x1.5
	25		

Accessories

Ordering data – Piston rod attachments, corrosion-resistant

Datasheets → Internet: piston rod attachment

Designation	For Ø	Part no.	Type
Rod eye CRSGS			
	12	195580	CRSGS-M6
	16		
	20	195581	CRSGS-M8
	25	195582	CRSGS-M10x1.25
	32		
	40	195583	CRSGS-M12x1.25
	50	195584	CRSGS-M16x1.5
	63		
Self-aligning rod coupler CRFK			
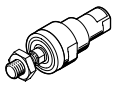	25	2305778	CRFK-M10x1.25
	32		
	40	2305779	CRFK-M12x1.25
	50	2490673	CRFK-M16x1.5
	63		

Designation	For Ø	Part no.	Type
Rod clevis CRSG			
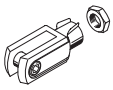	8	8165295	CRSG-M4
	12	13567	CRSG-M6
	16		
	20	13568	CRSG-M8
	25	13569	CRSG-M10x1.25
	32		
	40	13570	CRSG-M12x1.25
	50	13571	CRSG-M16x1.5
	63		

Ordering data – Mounting components

Datasheets → Internet: clevis foot

Designation	For Ø	Part no.	Type
Clevis foot LBG			
	32	31761	LBG-32
	40	31762	LBG-40
	50	31763	LBG-50
	63	31764	LBG-63

Designation	For Ø	Part no.	Type
Right-angle clevis foot LQG			
	32	31768	LQG-32
	40	31769	LQG-40
	50	31770	LQG-50
	63	31771	LQG-63

Ordering data – Guide units

Datasheets → Internet: feng

	For Ø	Stroke [mm]	With recirculating ball bearing guide Part no.	Type	With plain-bearing guide Part no.	Type
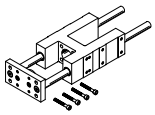	8, 10	1 ... 100	35197	FEN-8/10-...-KF	35196	FEN-8/10-...-GF
	12, 16	1 ... 200	33481	FEN-12/16-...-KF	19168	FEN-12/16-...-GF
	20	2 ... 250	33482	FEN-20-...-KF	19169	FEN-20-...-GF
	25	2 ... 250	33483	FEN-25-...-KF	19170	FEN-25-...-GF

Accessories

Bellows kit DADB

General technical data									
Type DADB-S1-		12	16	20	25	32	40	50	63
Max. stroke range of the cylinder1)									
DSNU	[mm]	10 ... 200	10 ... 200	10 ... 320	10 ... 500				
Type of mounting		Via threaded pin							
Mounting position		Any							
Media resistance		Dust, chippings, oil, grease, fuel (➔ Internet: media resistance)							
Ambient temperature2)	[°C]	–10 ... +80							
Corrosion resistance class CRC[3)]		3 - High corrosion stress							

1) In conjunction with the bellows kit DADB
2) Note operating range of proximity switches and cylinder
3) More information www.festo.com/x/topic/crc

Materials

Sectional view

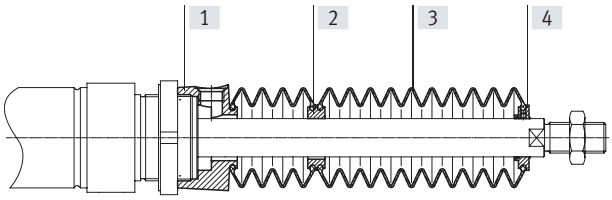

Bellows		
[1]	Connection	Polyamide
[2]	Intermediate piece	Polyamide
[3]	Bellows	NBR
[4]	End piece	Polyamide
–	O-ring	NBR
	Note on materials	RoHs-compliant
	Suitable for the production of Li-ion batteries	Suitable for battery production with reduced Cu/Zn/Ni values (F1a)

Accessories

Weight [g] Type DADB-S1- Stroke [mm]	12	16	20	25
10 ... 50	7	7	20	19
51 ... 100	9	9	32	31
101 ... 150	13	13	45	44
151 ... 200	16	16	58	57
201 ... 250	–	–	73	72
251 ... 300	–	–	85	84
301 ... 350	–	–	100	98
351 ... 400	–	–	–	109
401 ... 450	–	–	–	124
451 ... 500	–	–	–	136

Type DADB-S1- Stroke [mm]	32	40	50	63
10 ... 50	29	34	55	55
51 ... 125	41	49	75	75
126 ... 175	51	60	89	89
176 ... 250	66	78	113	113
251 ... 300	79	93	131	131
301 ... 350	92	108	149	149
351 ... 375	92	108	151	151
376 ... 425	104	122	169	169
426 ... 475	117	137	187	187
476 ... 500	117	137	189	189

Accessories

Travel speed v as a function of tubing length l

The bellows kit is a leak-free system.
To prevent unwanted media from being drawn in, the supply or exhaust air of the kit is ducted in the connection part via a pressure compensation opening.
The pressure generated in the bellows kit by the positioning motion is primarily defined by the travel speed and tubing length. The recommended tube length in relation to the travel speed of the drive can be read from the diagram.

Advancing

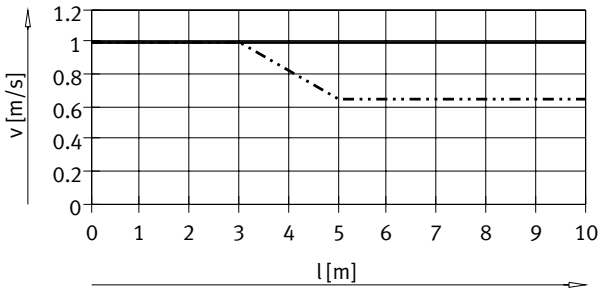

DSNU-12/16
DSNU-20/25

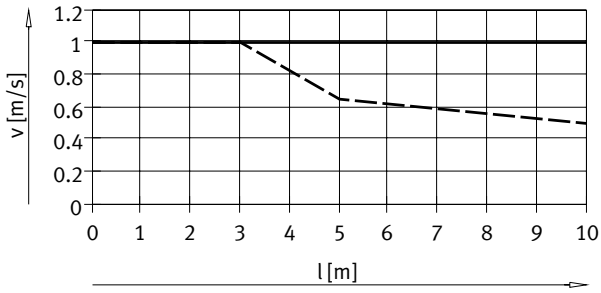

DSNU-32/50/63
DSNU-40

Retracting

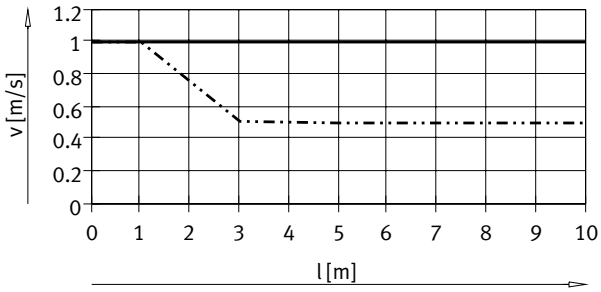

DSNU-12/16
DSNU-20/25

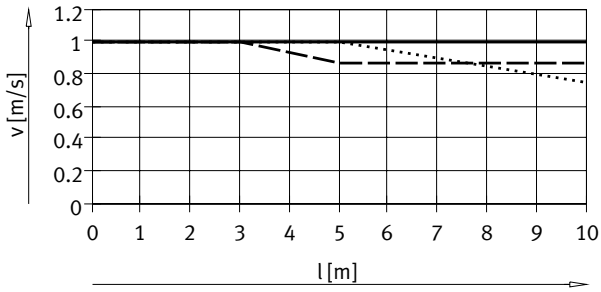

DSNU-32
DSNU-40
DSNU-50/63

Note
The push-in fittings in the adjacent table must be used for the pressure compensation hole.
Silencers can be used as an alternative. This reduces the travel speed slightly.

Tubing size and push-in fitting for pressure compensation hole

ø [mm]	Tubing O.D. [mm]	Push-in fitting Part no.	Type
12, 16, 20, 25	6	**153317**	**QSM-M5-6-I**
		578371	**NPQH-DK-M5-Q6-P10**
		578335	**NPQH-D-M5-Q6-P10**
		578359	**NPQH-D-M5-S6-P10**
32, 40	8	**186109**	**QS-G1/8-8-I**
		578376	**NPQH-DK-G18-Q8-P10**
		578362	**NPQH-D-G18-S8-P10**
50, 63	12	**186350**	**QS-G1/4-12**
		578344	**NPQH-D-G14-Q12-P10**
		578366	**NPQH-D-G14-S12-P10**

Accessories

Dimensions Download CAD data ➔ www.festo.com

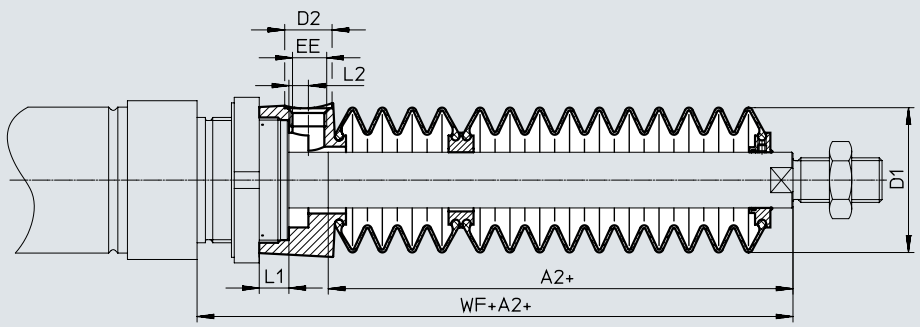

⌀	12/16							20						
Stroke [mm]	A2[1]	D1 ⌀ max.	D2 ⌀	EE	L1	L2	WF+A2	A2[1]	D1 ⌀ max.	D2 ⌀	EE	L1	L2	WF+A2
10 ... 50	23	22	8.5	M5	5	3.2	45	22	29	8.5	M5	4.2	2.7	46
51 ... 100	34						56	34						58
101 ... 150	48						70	47						71
151 ... 200	59						81	60						84
201 ... 250	–						–	75						99
251 ... 300	–						–	86						110
301 ... 350	–						–	101						125
351 ... 400	–						–	–						–
401 ... 450	–						–	–						–
451 ... 500	–						–	–						–

⌀	25						
Stroke [mm]	A2[1]	D1 ⌀ max.	D2 ⌀	EE	L1	L2	WF+A2
10 ... 50	22	29	8.5	M5	4.2	2.7	50
51 ... 100	34						62
101 ... 150	47						75
151 ... 200	60						88
201 ... 250	75						103
251 ... 300	86						114
301 ... 350	101						129
351 ... 400	112						140
401 ... 450	127						155
451 ... 500	138						166

1) The dimension corresponds to the K8 value (extended piston rod) of the drive

Accessories

Dimensions Download CAD data ➔ www.festo.com

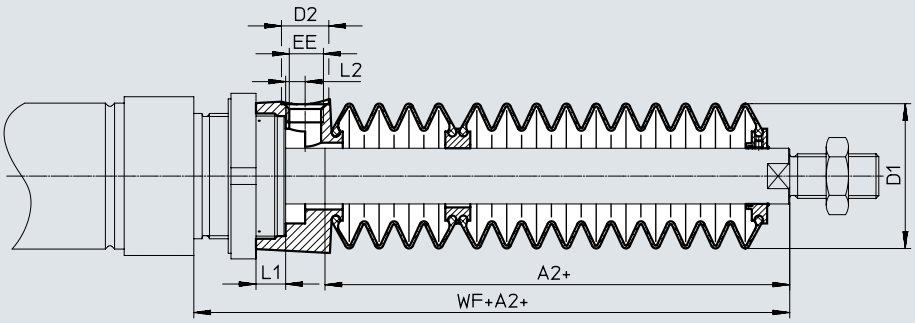

⌀	32							40						
Stroke [mm]	A2[1]	D1 ⌀ max.	D2 ⌀	EE	L1	L2	WF+A2	A2[1]	D1 ⌀ max.	D2 ⌀	EE	L1	L2	WF+A2
10 … 50	30	38	14	G1/8	12.9	5.4	64	29	46	14	G1/8	8.1	5.4	68
51 … 125	48						82	44						83
126 … 175	63						97	57						96
176 … 250	82						116	73						112
251 … 300	97						131	87						126
301 … 350	113						147	101						140
351 … 375	115						149	102						141
376 … 425	131						165	116						155
426 … 475	147						181	131						170
476 … 500	149						183	132						171

⌀	50/63						
Stroke [mm]	A2[1]	D1 ⌀ max.	D2 ⌀	EE	L1	L2	WF+A2
10 … 50	30	57	17	G1/4	10.65	7	74/75
51 … 125	48						92/93
126 … 175	58						102/103
176 … 250	77						121/122
251 … 300	88						132/133
301 … 350	99						143/144
351 … 375	106						150/151
376 … 425	117						161/162
426 … 475	128						172/173
476 … 500	135						179/180

1) The dimension corresponds to the K8 value (extended piston rod) of the drive

Accessories

Ordering data – Bellows kit

An extended piston rod (order code K8) is absolutely essential when using a bellows kit ➔ Ordering data – Modular product system.

The necessary dimension for K8 as a function of piston diameter and cylinder stroke as well as the corresponding bellows kit is indicated in the table below:

Order example:
Selected round cylinder:
DSNU-25-320-PPV-A-MQ-...
The dimension for the corresponding K8 value (see table): 101 mm
Complete order reference for round cylinder:
DSNU-25-320-PPV-A-MQ-...-101K8
The corresponding bellows kit:
DADB-S1-25-S301-350

Cylinder data			Protective bellows kit	
ø [mm]	Stroke [mm]	Dimension for K8 [mm]	Part no.	Type
12	10 ... 50	23	553391	DADB-S1-12-S10-50
	51 ... 100	34	553393	DADB-S1-12-S51-100
	101 ... 150	48	553395	DADB-S1-12-S101-150
	151 ... 200	59	553397	DADB-S1-12-S151-200
20	10 ... 50	22	553407	DADB-S1-20-S10-50
	51 ... 100	34	553409	DADB-S1-20-S51-100
	101 ... 150	47	553411	DADB-S1-20-S101-150
	151 ... 200	60	553413	DADB-S1-20-S151-200
	201 ... 250	75	553415	DADB-S1-20-S201-250
	251 ... 300	86	553417	DADB-S1-20-S251-300
	301 ... 320	101	553419	DADB-S1-20-S301-350
32	10 ... 50	30	553441	DADB-S1-32-S10-50
	51 ... 125	48	553443	DADB-S1-32-S51-125
	126 ... 175	63	553445	DADB-S1-32-S126-175
	176 ... 250	82	553447	DADB-S1-32-S176-250
	251 ... 300	97	553449	DADB-S1-32-S251-300
	301 ... 350	113	553451	DADB-S1-32-S301-350
	351 ... 375	115	553453	DADB-S1-32-S351-375
	376 ... 425	131	553455	DADB-S1-32-S376-425
	426 ... 475	147	553457	DADB-S1-32-S426-475
	476 ... 500	149	553459	DADB-S1-32-S476-500
50	10 ... 50	30	553481	DADB-S1-50-S10-50
	51 ... 125	48	553483	DADB-S1-50-S51-125
	126 ... 175	58	553485	DADB-S1-50-S126-175
	176 ... 250	77	553487	DADB-S1-50-S176-250
	251 ... 300	88	553489	DADB-S1-50-S251-300
	301 ... 350	99	553491	DADB-S1-50-S301-350
	351 ... 375	106	553493	DADB-S1-50-S351-375
	376 ... 425	117	553495	DADB-S1-50-S376-425
	426 ... 475	128	553497	DADB-S1-50-S426-475
	476 ... 500	135	553499	DADB-S1-50-S476-500

Cylinder data			Protective bellows kit	
ø [mm]	Stroke [mm]	Dimension for K8 [mm]	Part no.	Type
16	10 ... 50	23	553399	DADB-S1-16-S10-50
	51 ... 100	34	553401	DADB-S1-16-S51-100
	101 ... 150	48	553403	DADB-S1-16-S101-150
	151 ... 200	59	553405	DADB-S1-16-S151-200
25	10 ... 50	22	553421	DADB-S1-25-S10-50
	51 ... 100	34	553423	DADB-S1-25-S51-100
	101 ... 150	47	553425	DADB-S1-25-S101-150
	151 ... 200	60	553427	DADB-S1-25-S151-200
	201 ... 250	75	553429	DADB-S1-25-S201-250
	251 ... 300	86	553431	DADB-S1-25-S251-300
	301 ... 350	101	553433	DADB-S1-25-S301-350
	351 ... 400	112	553435	DADB-S1-25-S351-400
	401 ... 450	127	553437	DADB-S1-25-S401-450
	451 ... 500	138	553439	DADB-S1-25-S451-500
40	10 ... 50	29	553461	DADB-S1-40-S10-50
	51 ... 125	44	553463	DADB-S1-40-S51-125
	126 ... 175	57	553465	DADB-S1-40-S126-175
	176 ... 250	73	553467	DADB-S1-40-S176-250
	251 ... 300	87	553469	DADB-S1-40-S251-300
	301 ... 350	101	553471	DADB-S1-40-S301-350
	351 ... 375	102	553473	DADB-S1-40-S351-375
	376 ... 425	116	553475	DADB-S1-40-S376-425
	426 ... 475	131	553477	DADB-S1-40-S426-475
	476 ... 500	132	553479	DADB-S1-40-S476-500
63	10 ... 50	30	553501	DADB-S1-63-S10-50
	51 ... 125	48	553503	DADB-S1-63-S51-125
	126 ... 175	58	553505	DADB-S1-63-S126-175
	176 ... 250	77	553507	DADB-S1-63-S176-250
	251 ... 300	88	553509	DADB-S1-63-S251-300
	301 ... 350	99	553511	DADB-S1-63-S301-350
	351 ... 375	106	553513	DADB-S1-63-S351-375
	376 ... 425	117	553515	DADB-S1-63-S376-425
	426 ... 475	128	553517	DADB-S1-63-S426-475
	476 ... 500	135	553519	DADB-S1-63-S476-500

Accessories

Ordering data – Proximity switch for T-slot, magneto-resistive

Datasheets → Internet: smt

	Type of mounting	Switching output	Electrical connection	Cable length [m]	Part no.	Type
N/O						
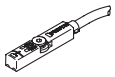	Inserted in the slot from above, flush with the cylinder profile, short design	PNP	Cable, 3-core	2.5	**574335**	**SMT-8M-A-PS-24V-E-2.5-OE**
			Cable, 2-core	5	**8165237**	**SMT-8M-A-ZS-24V-E-5.0-OE**
			Plug M8x1, 3-pin	0.3	**574334**	**SMT-8M-A-PS-24V-E-0.3-M8D**
		NPN	Cable, 3-core	2.5	**574338**	**SMT-8M-A-NS-24V-E-2.5-OE**
			Plug M8x1, 3-pin	0.3	**574339**	**SMT-8M-A-NS-24V-E-0.3-M8D**

Ordering data – Proximity switch for T-slot, magneto-resistive

Datasheets → Internet: crsmt

	Type of mounting	Switching output	Electrical connection	Cable length [m]	Part no.	Type
N/O						
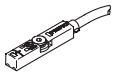	Inserted in the slot from above, flush with the cylinder profile	PNP	Cable, 3-core	5.0	**574380**	**CRSMT-8M-PS-24V-K-5.0-OE**
			Cable, 3-core	10.0	**574381**	**CRSMT-8M-PS-24V-K-10.0-OE**
			Plug M8x1, 3-pin	0.3	**574383**	**CRSMT-8M-PS-24V-K-0.3-M8D**
			Plug M12x1, 3-pin	0.3	**574382**	**CRSMT-8M-PS-24V-K-0.3-M12**

Ordering data – Proximity switch for T-slot, magnetic Hall

Datasheets → Internet: sdbt

	Type of mounting	Switching output	Electrical connection	Cable length [m]	Part no.	Type
N/O or N/C contact, switchable						
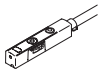	Inserted in the slot from above, flush with the cylinder profile, short design	PNP, switchable to NPN	Plug M8x1, 3-pin	0.3	**8059120**	**SDBT-MSX-1L-PU-E-0.3-N-M8**
			Cable, 3-core	2.5	**8059121**	**SDBT-MSX-1L-PU-E-2.5-N-LE**
		NPN, switchable to PNP	Plug M8x1, 3-pin	0.3	**8059123**	**SDBT-MSX-1L-NU-E-0.3-N-M8**
			Cable, 3-core	2.5	**8059124**	**SDBT-MSX-1L-NU-E-2.5-N-LE**

Ordering data – Mounting kit SMBR – for proximity switches

Datasheets → Internet: smbr

	For Ø	Retaining bracket material	Ambient temperature	CRC[1]	Part no.	Type
	8	POM	-20 ... 70 °C	2	**175091**	**SMBR-8-8**
	10				**175092**	**SMBR-8-10**
	12				**175093**	**SMBR-8-12**
	16				**175094**	**SMBR-8-16**
	20				**175095**	**SMBR-8-20**
	25				**175096**	**SMBR-8-25**
	32				**175097**	**SMBR-8-32**
	40				**175098**	**SMBR-8-40**
	50				**175099**	**SMBR-8-50**
	63				**175100**	**SMBR-8-63**

1) More information www.festo.com/x/topic/crc

Ordering data – Mounting kit DASP-C1, corrosion-resistant – for proximity switches

Datasheets → Internet: dasp

	For Ø	Retaining bracket material	Ambient temperature	Food-safe1)	CRC[2]	Part no.	Type
	12	PP	-40 ... 80 °C	See supplementary material information	4	**8228621**	**DASP-C1-12-A-R1**
	16					**8228622**	**DASP-C1-16-A-R1**
	20					**8228623**	**DASP-C1-20-A-R1**
	25					**8228624**	**DASP-C1-25-A-R1**
	32					**8228625**	**DASP-C1-32-A-R1**
	40					**8228626**	**DASP-C1-40-A-R1**
	50					**8228627**	**DASP-C1-50-A-R1**
	63					**8228628**	**DASP-C1-63-A-R1**

1) More information: www.festo.com/certificates/FP_01-50-02-16
2) More information www.festo.com/x/topic/crc

Accessories

Ordering data – Mounting kit SMBR-...-S6, heat-resistant – for proximity switches

Datasheets → Internet: smbr

	For Ø	Housing material	Ambient temperature	CRC[1]	Part no.	Type
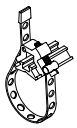	8 ... 63	Wrought aluminium alloy, anodised; high-alloy stainless steel	-20 ... 120 °C	4	**538937**	**SMBR-8-8/100-S6**

1) More information www.festo.com/x/topic/crc

Connecting cables NEBA, straight, M8 connection

	Electrical connection 1, connection technology	Electrical connection 2, connection technology	Electrical connection 2, number of pins/cores	Cable length	Part no.	Type
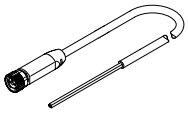	M8x1 A-coded to EN 61076-2-104	Open end	3	2.5 m	**8078223**	**NEBA-M8G3-U-2.5-N-LE3**
				5 m	**8078224**	**NEBA-M8G3-U-5-N-LE3**

Connecting cables NEBA, straight, M12 connection

	Electrical connection 1, connection technology	Electrical connection 2, connection technology	Electrical connection 2, number of pins/cores	Cable length	Part no.	Type
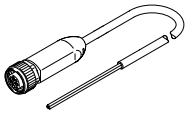	M12x1, A-coded to EN 61076-2-101	Open end	3	2.5 m	**8078236**	**NEBA-M12G5-U-2.5-N-LE3**
				5 m	**8078237**	**NEBA-M12G5-U-5-N-LE3**

Connecting cables NEBA, angled, M8 connection

	Electrical connection 1, connection technology	Electrical connection 2, connection technology	Electrical connection 2, number of pins/cores	Cable length	Part no.	Type
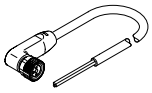	M8x1 A-coded to EN 61076-2-104	Open end	3	2.5 m	**8078230**	**NEBA-M8W3-U-2.5-N-LE3**
				5 m	**8078231**	**NEBA-M8W3-U-5-N-LE3**

Connecting cables NEBA, angled, M12 connection

	Electrical connection 1, connection technology	Electrical connection 2, connection technology	Electrical connection 2, number of pins/cores	Cable length	Part no.	Type
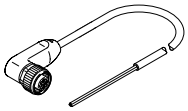	M12x1, A-coded to EN 61076-2-101	Open end	3	2.5 m	**8078245**	**NEBA-M12W5-U-2.5-N-LE3**
				5 m	**8078246**	**NEBA-M12W5-U-5-N-LE3**

Accessories

Position transmitter

The position transmitter continuously senses the position of the piston.

It has an analogue output with an output signal that is proportional to the piston position.

Ordering data – Position transmitter for T-slot

Datasheets → Internet: sdas

	Position measuring range	Description	Type of mounting	Electrical connection	Cable length [m]	Part no.	Type
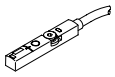	≤ 52	Choice of two operating modes: • Two adjustable switching outputs • IO-Link®	Inserted in the slot from above	Plug M8x1, 4-pin, in-line	0.3	**8063974**	**SDAS-MHS-M40-1L-PNLK-PN-E-0.3-M8**

Ordering data – Position transmitter for T-slot

Datasheets → Internet: sdat

	Position measuring range	Analogue output [V]	Analogue output [mA]	Type of mounting	Electrical connection	Cable length [m]	Part no.	Type
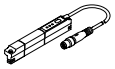	0 … 50	–	4 … 20	Inserted in the slot from above	Plug M8x1, 4-pin, in-line	0.3	**1531265**	**SDAT-MHS-M50-1L-SA-E-0.3-M8**
	0 … 80						**1531266**	**SDAT-MHS-M80-1L-SA-E-0.3-M8**
	0 … 100						**1531267**	**SDAT-MHS-M100-1L-SA-E-0.3-M8**
	0 … 125						**1531268**	**SDAT-MHS-M125-1L-SA-E-0.3-M8**
	0 … 160						**1531269**	**SDAT-MHS-M160-1L-SA-E-0.3-M8**

Ordering data – Position transmitter for T-slot

Datasheets → Internet: smat

	Position measuring range	Analogue output [V]	Analogue output [mA]	Type of mounting	Electrical connection	Cable length [m]	Part no.	Type
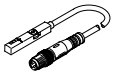	0 … 40	0 … 10	–	Inserted in the slot from above	Plug M8x1, 4-pin, in-line	0.3	**553744**	**SMAT-8M-U-E-0.3-M8D**

Ordering data – SMBR mounting kit – for position transmitters

Datasheets → Internet: smbr

	For ⌀	Retaining bracket material	Ambient temperature	CRC[1]	Part no.	Type
	8	POM	-20 … 70 °C	2	**175091**	**SMBR-8-8**
	10				**175092**	**SMBR-8-10**
	12				**175093**	**SMBR-8-12**
	16				**175094**	**SMBR-8-16**
	20				**175095**	**SMBR-8-20**
	25				**175096**	**SMBR-8-25**
	32				**175097**	**SMBR-8-32**
	40				**175098**	**SMBR-8-40**
	50				**175099**	**SMBR-8-50**
	63				**175100**	**SMBR-8-63**

1) More information www.festo.com/x/topic/crc

Ordering data – Mounting kit SMBR-...-S6, heat-resistant – for position transmitters

Datasheets → Internet: smbr

	For ⌀	Housing material	Ambient temperature	CRC[1]	Part no.	Type
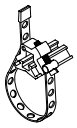	8 … 63	Wrought aluminium alloy, anodised; high-alloy stainless steel	-20 … 120 °C	4	**538937**	**SMBR-8-8/100-S6**

1) More information www.festo.com/x/topic/crc

Accessories

Connecting cables NEBA, straight

	Electrical connection 1, connection technology	Electrical connection 2, connection technology	Electrical connection 2, number of pins/cores	Cable length	Part no.	Type
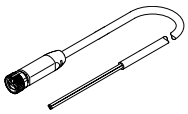	M8x1 A-coded to EN 61076-2-104	Open end	4	2.5 m	**8078227**	**NEBA-M8G4-U-2.5-N-LE4**
				5 m	**8078228**	**NEBA-M8G4-U-5-N-LE4**

Connecting cables NEBA, angled

	Electrical connection 1, connection technology	Electrical connection 2, connection technology	Electrical connection 2, number of pins/cores	Cable length	Part no.	Type
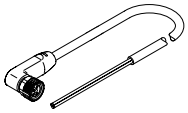	M8x1 A-coded to EN 61076-2-104	Open end	4	2.5 m	**8078233**	**NEBA-M8W4-U-2.5-N-LE4**
				5 m	**8078234**	**NEBA-M8W4-U-5-N-LE4**

Ordering data – One-way flow control valves

Datasheets → Internet: grl

	Connection Thread	For tubing O.D.	Material	Part no.	Type
For exhaust air					
	M5	3	Metal design	**193137**	**GRLA-M5-QS-3-D**
		4		**193138**	**GRLA-M5-QS-4-D**
		6		**193139**	**GRLA-M5-QS-6-D**
	G1/8	3		**193142**	**GRLA-1/8-QS-3-D**
		4		**193143**	**GRLA-1/8-QS-4-D**
		6		**193144**	**GRLA-1/8-QS-6-D**
		8		**193145**	**GRLA-1/8-QS-8-D**
	G1/4	6		**193146**	**GRLA-1/4-QS-6-D**
		8		**193147**	**GRLA-1/4-QS-8-D**
		10		**193148**	**GRLA-1/4-QS-10-D**
	G3/8	6		**193149**	**GRLA-3/8-QS-6-D**
		8		**193150**	**GRLA-3/8-QS-8-D**
		10		**193151**	**GRLA-3/8-QS-10-D**
For supply air					
	M5	3	Metal design	**193153**	**GRLZ-M5-QS-3-D**
		4		**193154**	**GRLZ-M5-QS-4-D**
		6		**193155**	**GRLZ-M5-QS-6-D**
	G1/8	3		**193156**	**GRLZ-1/8-QS-3-D**
		4		**193157**	**GRLZ-1/8-QS-4-D**
		6		**193158**	**GRLZ-1/8-QS-6-D**
		8		**193159**	**GRLZ-1/8-QS-8-D**