T8000 Series

T8600 MODBUS Touch Screen Thermostat

Johnson Controls

T8600 MODBUS Series Touch Screen Thermostat

Application

T8600···JS0/R0 Touch screen thermostats are designed to control heating, cooling, or air conditioning unit in Commercial, Industrial and Residential Installation. Typical applications include the control of fan coil units, packaged terminal air conditioners and combination of heating and cooling equipment. As part of the system, T8000 controls a two-way or three-way valve and a multi-speed line voltage fan.

T8600 features with microcomputer control, large LCD screen display, and displays the status of work mode (cooling/heating/air ventilation), fan speed, indoor temperature and set temperature etc.. Capacitive touch screen enhances the fluency on operation. Keypad includes: Power on/off (⏻), Mode selection (M), Fan Speed selection (), Clock/Timer ( ) and two Adjustment buttons (∧&∨).

T8600···JS0/R0 Thermostat

Features and Benefits

Touch screen	• Capacitive touch screen enhances the fluency on operation
Backlit Liquid Crystal Display（LCD）	• Offer Easy-to-Read Real-time control status of the environment, graphical messages with constant backlight that brightens during user interaction
6 Function Keys	• All-in-One location function keys, simplified user to change the setpoint and parameter
	• Molded Industrial Standard Graphical Symbol
Appearance	• Attractively-Style Twin-Ring Streamline ABS Plastic Cover and Base
	• All-in-One Enclosure Design without Protrusion of Power Circuit
Energy Saving	• Features with Unoccupied Function
	• Requires no batteries; EEPROM retains the last events and parameter settings after a loss of power
Installation, Service and Maintenance	• Universal Mounting with Standard Wall Box
	• Quick Replacement to reduce to Downtime of Service Maintenance

Function

Item	Description	T8600-TB20-9JR0-M0	T8600-TB20-9JS0-M0	T8600-TF20-9JR0-M0	T8600-TF20-9JS0-M0
Application	2-pipe heating or cooling	■	■		
	4-pipe heating and cooling			■	■
	MODBUS Communication	■	■	■	■
User Interface	Touch Screen	■	■	■	■
	Backlight (White)	■	■	■	■
	EN/Icon	■	■	■	■
	° C/° F Changeable	■	■	■	■
Energy Saving	Ventilation Mode	■	■	■	■
	Setpoint Limit	■	■	■	■
	Occupied contact with NO/NC options		■		■
	Unoccupied setpoints		■		■
	Low fan in unoccupancy		■		■
	Auto Changeover			■	■
Other Functions	Timer on/off	■	■	■	■
	Display setpoint only	■	■	■	■
	Anti-freezing	■	■	■	■
	Key Lock	■	■	■	■
	Display temperature calibration	■	■	■	■
	Remote temperature sensor	■		■	
	Restart after power failure	■	■	■	■
	Timer Function	■	■	■	■

Model Selection Guide

				T8	6	0	0	-	T	B	2	0	-	9	J	S	0	-	M	0
Touch Screen	8	=	Touch Screen	8																
Version	6	=	Version		6															
System	0	=	ON/OFF			0														
Fan Control	0	=	Auto-Hi-Me-Lo				0													
Temperature Scale	T	=	℃ or °F optional						T											
Application	B	=	2-pipe heating or cooling							B										
	F	=	4-pipe heating and cooling																	
Reserve	2	=	Reserve								2									
Control	0	=	ON/OFF									0								
	1	=	Modulating 0-10V																	
Color	9	=	White											9						
Logo	J	=	JCI												J					
Function	S	=	With unoccupied function													S				
	R	=	With remote sensor																	
Reserve	0	=	Reserve														0			
Communication	M	=	MODBUS RTU															M		
Reserve	0	=	Reserve																	0

Product Overview

T8600 touch screen thermostat with 4-basic models cover all types of FCU standalone applications. There are models for 2-pipe cooling or heating, 4-pipe cooling and heating, for 2-wire valve control. On-board high accuracy NTC sensor allows precision comfort control over occupied space area.

The T8600 thermostats come with 12-hours timer that allows user to schedule On-Time or Off-Time for the fan coil depending on user needs.

88 x 88mm size allows for 75 x 75 x 35mm standard wall box installation.

Model T8600-TB20-9JS0-M0

The Model T8600-TB20-9JS0 is with AC220V, LCD display (with Backlit) fan coil unit thermostat that design for cooling or heating fan coil unit with 2-wire valve actuator application. Integrated with System On/Off button allows user to shutdown the T8000 and cutoff the output power for fan (cutoff the Output power for Valve Actuator). Simply pressing the fan speed button, allows user selection of Auto-High-Med-Low fan speed. All fan output by relay that can withstand max. of 5Amp (Res). operating current.

Additional Dry-contact for Occupancy mode that allows better comfort control and to achieve energy cost saving.

Model T8600-TB20-9JR0-M0

The Model T8600-TB20-9JR0 is with AC220V, LCD display (with Backlit) fan coil unit thermostat that design for cooling or heating fan coil unit with 2-wire valve actuator application. Integrated with System On/Off button allows user to shutdown the T8000 and cutoff the output power for fan (cutoff the Output power for Valve Actuator). Simply pressing the fan speed button, allows user selection of Auto-High-Med-Low fan speed. All fan output by relay that can withstand max. of 5Amp (Res). operating current.

With remote temperature sensor. While remote sensor is connected, the built-in sensor will be disable automatically.

Model T8600-TF20-9JS0-M0

The Model T8600-TF20-9JS0 is with AC220V, LCD display (with Backlit) fan coil unit thermostat that design for cooling or heating fan coil unit with 4-wire valve actuator application. Integrated with System On/Off button allows user to shutdown the T8000 and cutoff the output power for fan (cutoff the Output power for Valve Actuator). Simply pressing the fan speed button, allows user selection of Auto-High-Med-Low fan speed. All fan output by relay that can withstand max. of 5Amp (Res). operating current.

Additional Dry-contact for Occupancy mode that allows better comfort control and to achieve energy cost saving.

Model T8600-TF20-9JR0-M0

The Model T8600-TF20-9JR0 is with AC220V, LCD display (with Backlit) fan coil unit thermostat that design for cooling or heating fan coil unit with 4-wire valve actuator application. Integrated with System On/Off button allows user to shutdown the T8000 and cutoff the output power for fan (cutoff the Output power for Valve Actuator). Simply pressing the fan speed button, allows user selection of Auto-High-Med-Low fan speed. All fan output by relay that can withstand max. of 5Amp (Res). operating current.

With remote temperature sensor. While remote sensor is connected, the built-in sensor will be disable automatically.

IMPORTANT:
Use this T8600 Series Line Voltage Thermostat only as an operating control. Where failure of malfunction of the T8600 Series Thermostat could lead to personal injury or property damage to the controlled equipment or other property, additional precautions must be designed into the system. Incorporate and maintain other devices such as supervisory or alarm systems or safety or limit controls intended to warn of, or protect against, failure or malfunction of the T8000 Series Thermostat.

Dimensions

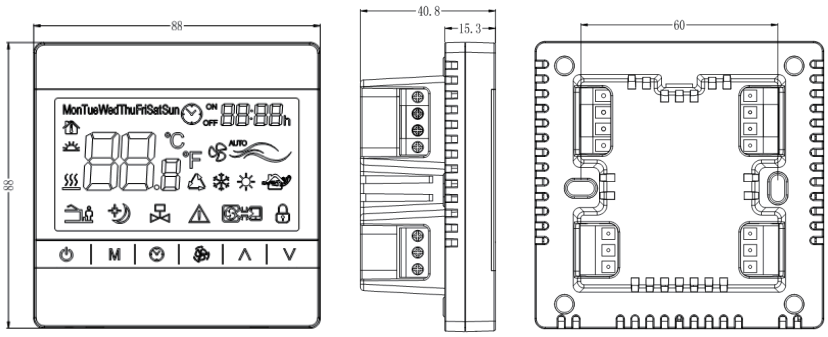

T8600-TB20-9JS0/9JR0-M0、T8600-TF20-9JS0/9JR0-M0 (mm)

Installation

T8600 thermostats allow for 75 x 75 x 35mm standard wall box installation.

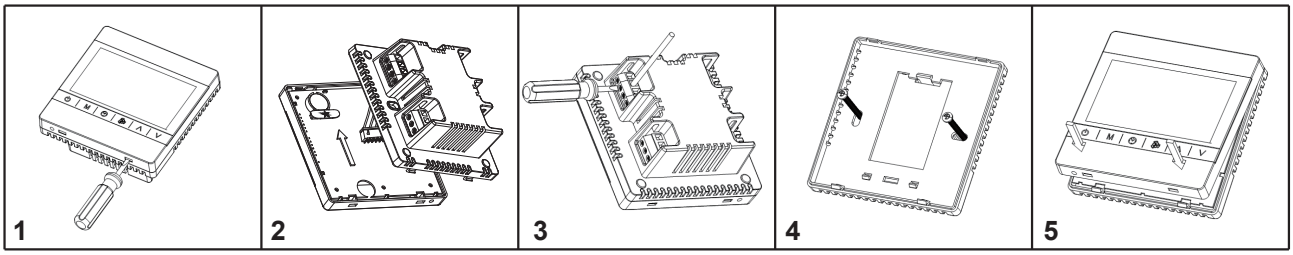

* Remove the insulating strip before installation

Wiring Diagram

T8600-TF20-9JR0-M0

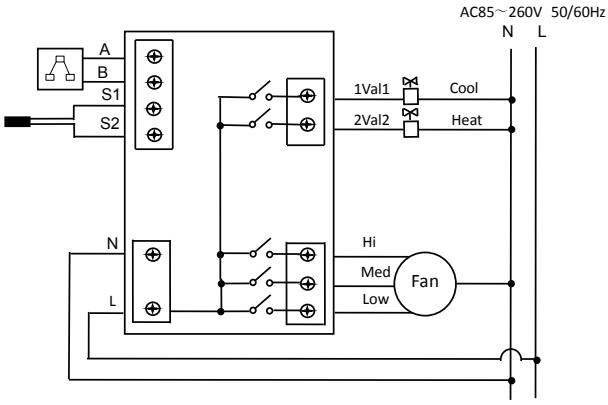

T8600-TF20-9JS0-M0

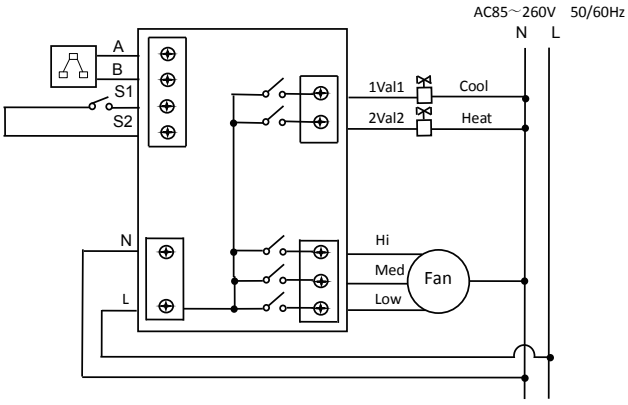

T8600-TB20-9JR0-M0

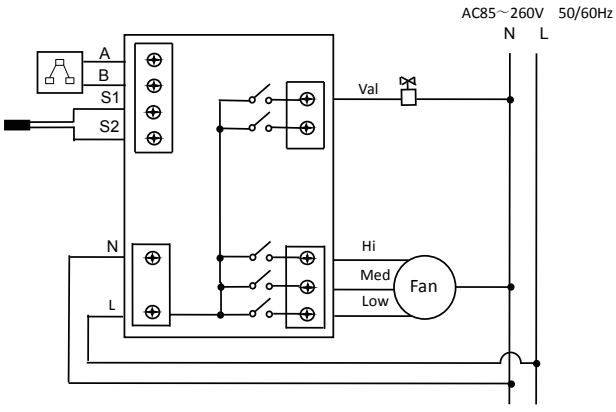

T8600-TB20-9JS0-M0

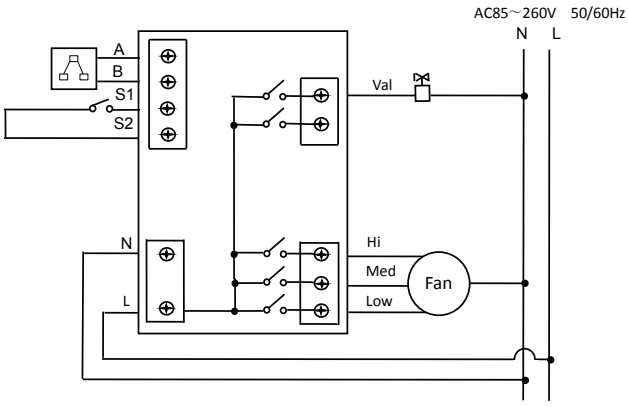

Ordering Information

To order the replacement T8600 Series thermostat, contact the nearest Johnson Controls® representative. Specify the desired product code number according to Table of "Function" and "Model Selection Guide".

"IMPORTANT: The power supply to the thermostat must include overload protection. Failure to include overload protection may result in damage to the thermostat.

Product	T8600 Touch screen thermostat	
	T8600-TB20-9JR0-M0	Backlit LCD 2-pipe Cooling / Heating FCU Thermostat with remote sensor, MODBUS
	T8600-TB20-9JS0-M0	Backlit LCD 2-pipe Cooling / Heating FCU Thermostat and Occupancy Contact, MODBUS
	T8600-TF20-9JR0-M0	Backlit LCD 4-pipe Cooling and Heating FCU Thermostat with remote sensor, MODBUS
	T8600-TF20-9JS0-M0	Backlit LCD 4-pipe Cooling and Heating FCU Thermostat and Occupancy Contact, MODBUS
Power Requirements	AC85-260V 50/60HZ	
Accuracy	±1° C	
Display Range	0~55° C	
Setpoint Range	5~35° C	
Unoccupied Mode	T8600...9JS0 External Voltage-Free Contact Input Signal	
Remote sensor	T8600...9JR0 with remote temperature sensor NTC 10K, 1.5 m, Max.20m (0.7 ~1.0mm^2)	
Termination	Screw terminals	
Valve Control	T8600-TB20-9JR0-M0 (2-pipe Cooling / Heating)	1 x Single-Pole, Single Throw (SPST), 5A(Maximum), Relay Output
	T8600-TB20-9JS0-M0 (2-pipe Cooling / Heating)	1 x Single-Pole, Single Throw (SPST), 5A(Maximum), Relay Output
	T8600-TF20-9JR0-M0 (4-pipe Cooling and Heating)	2 x Single-Pole, Single Throw (SPST), 5A(Maximum), Relay Output
	T8600-TF20-9JS0-M0 (4-pipe Cooling and Heating)	2 x Single-Pole, Single Throw (SPST), 5A(Maximum), Relay Output
Fan Control	3 x Single-Pole, Single Throw (SPST) , 5A (Res.) at 250 VAC (Maximum); Relay Output for High-Med-Low Fan	
Ambient Operating Conditions	0 to 45° C 90% Non-condensing RH	
Ambient Storage Conditions	-10 to 60 ° C 90% Non-condensing RH	
Housing Material	PC: UL 94-V0	
Protection Class	IP20	
Dimensions	88 x 88 mm	
Shipping Weight	Appr.214g	

* When connected, the On/Off switch does not disconnect power to the unit; it only turns off or on the LCD and functions.

Johnson Controls is a global diversified technology and industrial leader serving customers in more than 150 countries. Our 168,000 employees create quality products, services and solutions to optimize energy and operational efficiencies of buildings; lead-acid automotive batteries and advanced batteries for hybrid and electric vehicles; and interior systems for automobiles. Our commitment to sustainability dates back to our roots in 1885, with the invention of the first electric room thermostat. Through our growth strategies and by increasing market share we are committed to delivering value to shareholders and making our customers successful. In 2013, Corporate Responsibility Magazine recognized Johnson Controls as the #14 company in its annual "100 Best Corporate Citizens" list. For additional information, please visit http://www.johnsoncontrols.com.

Johnson Controls Building Efficiency delivers products, services and solutions that increase energy efficiency and lower operating costs in buildings for more than one million customers. Operating from 500 branch offices in more than 150 countries, we are a leading provider of equipment, controls and services for heating, ventilating, air-conditioning, refrigeration and security systems. We have been involved in more than 500 renewable energy projects including solar, wind and geothermal technologies. Our solutions have reduced carbon dioxide emissions by 16 million metric tons and generated savings of $7.5 billion since 2000. Many of the world's largest companies rely on us to manage 1.8 billion square feet of their commercial real estate.

Australia
Tel : +61 (2) 9805 8300
Fax: +61 (2) 9889 3016

China (Shanghai)
Tel : +86 (21) 6276 6509
Fax: +86 (21) 6277 3543

Hong Kong
Tel : +852 2590 0012
Fax: +852 2516 5648

India
Tel : +91 (22) 3082 2200
Fax: +91 (22) 3088 1592

Indonesia
Tel : +62 (21) 5366 8500
Fax: +62 (21) 5366 8300

Japan
Tel : +81 (3) 5738 6100
Fax: +81 (3) 5738 6298

Korea
Tel : +82 (2) 554 5935
Fax: +82 (2) 554 5739

Macau
Tel : +853 2875 1820
Fax: +853 2875 1825

Malaysia
Tel : +60 (3) 7628 4393
Fax: +60 (3) 7620 0538

New Zealand
Tel : +64 (9) 444 6434
Fax: +64 (9) 444 2092

Singapore
Tel : +65 6748 0202
Fax: +65 6284 3017

Thailand
Tel : +66 (2) 717 1260-80
Fax: +66 (2) 717 0861

Asia Engineering Centre: Wuxi, China
Shanghai Distribution Center: Shanghai, China
Asia Centre of Excellence in Engineering (CoEE): Beijing, China · Mumbai & Pune, India
Manufacturing/Assembly: Guangzhou & Wuxi, China · Pune, India

Johnson Controls

www.johnsoncontrols.com

© 2015 Johnson Controls, Inc.

Information contained herein including but not limited to the product design, specification or appearance is subject to change without notice. This document is for reference only, please refer to the actual product when buying.

Printed on recycled paper

PUBL-7565(0315)