Pro-face
by Schneider Electric

GP4000H Series
Hardware Manual

GP4000H-MM01-EN-PDF_02

The information provided in this documentation contains general descriptions and/or technical characteristics of the performance of the products contained herein. This documentation is not intended as a substitute for and is not to be used for determining suitability or reliability of these products for specific user applications. It is the duty of any such user or integrator to perform the appropriate and complete risk analysis, evaluation and testing of the products with respect to the relevant specific application or use thereof. Neither Schneider Electric nor any of its affiliates or subsidiaries (hereinafter, referred to as Schneider Electric) shall be responsible or liable for misuse of the information that is contained herein. If you have any suggestions for improvements or amendments or have found errors in this publication, please notify us.

You agree not to reproduce, other than for your own personal, noncommercial use, all or part of this document on any medium whatsoever without permission of Schneider Electric, given in writing. You also agree not to establish any hypertext links to this document or its content. Schneider Electric does not grant any right or license for the personal and noncommercial use of the document or its content, except for a non-exclusive license to consult it on an "as is" basis, at your own risk. All other rights are reserved.

All pertinent state, regional, and local safety regulations must be observed when installing and using this product. For reasons of safety and to help ensure compliance with documented system data, only the manufacturer should perform repairs to components.

When devices are used for applications with technical safety requirements, the relevant instructions must be followed.

Failure to use Schneider Electric software or approved software with our hardware products may result in injury, harm, or improper operating results.

Failure to observe this information can result in injury or equipment damage.

Copyright © 2017.11 Schneider Electric Japan Holdings Ltd. All Rights Reserved.

Table of Contents

	Safety Information	**5**
	About the Book	**7**
Chapter 1	**Overview**	**11**
	Model Numbers	**12**
	Package Contents	**13**
	Certifications and Standards	**14**
	Federal Communication Commission Radio Frequency Interference Statement - For USA	**16**
Chapter 2	**Device Connectivity**	**17**
	System Design	**18**
	Accessories	**19**
Chapter 3	**Parts Identification and Functions**	**21**
	Parts name and Functions	**22**
	LED Indications	**24**
Chapter 4	**Specifications**	**25**
4.1	General Specifications	**26**
	Electrical Specifications	**27**
	Environmental Specifications	**28**
	Structural Specifications	**29**
4.2	Functional Specifications	**31**
	Display Specifications	**32**
	Memory, Clock, Touch Panel	**33**
4.3	Interface Specifications	**34**
	Interface Specifications	**35**
	Interface Connection	**37**
	Connector for Direct-connect Cable	**38**
	Serial Interface	**40**
	Emergency Stop Switch / Stop Switch Output Interface	**42**
	3-Position Enable Switch Output Interface	**43**
	Key Switch Output Interface	**44**
	DC Power Interface	**45**
	Connecting the Power Supply	**46**
	Grounding	**48**
Chapter 5	**Dimensions**	**49**
	External Dimensions	**50**
	Dimensions with a Stop Switch Guard	**52**
Chapter 6	**Installation**	**53**
6.1	Fixing This Product	**54**
	Introduction	**55**
	Hand Strap	**56**
	Neck Strap	**57**
	Wall Hanging Adapter	**58**

6.2 Direct-connect Cable Attaching/Removing 59
Introduction 60
Attaching the Cable 61
Removing the Cable. 62
6.3 Attaching the Stop Switch Guard 63
Introduction 63
6.4 Replacing the Function Switch Sheet 64
Introduction 64
6.5 SD Card Insertion/Removal 65
Introduction 66
Inserting the SD Card. 67
Removing the SD Card 68
SD Card Data backup 70
Chapter 7 Maintenance 71
Regular Cleaning 72
Periodic Check Points 73
Replacing the Backlight 74
After-sales Service 75

Safety Information

Important Information

NOTICE

Read these instructions carefully, and look at the equipment to become familiar with the device before trying to install, operate, or maintain it. The following special messages may appear throughout this documentation or on the equipment to warn of potential hazards or to call attention to information that clarifies or simplifies a procedure.

The addition of this symbol to a “Danger” or “Warning” safety label indicates that an electrical hazard exists which will result in personal injury if the instructions are not followed.

This is the safety alert symbol. It is used to alert you to potential personal injury hazards. Obey all safety messages that follow this symbol to avoid possible injury or death.

⚠ DANGER

DANGER indicates a hazardous situation which, if not avoided, **will result in** death or serious injury.

⚠ WARNING

WARNING indicates a hazardous situation which, if not avoided, **could result in** death or serious injury.

⚠ CAUTION

CAUTION indicates a hazardous situation which, if not avoided, **could result** in minor or moderate injury.

NOTICE

NOTICE is used to address practices not related to physical injury.

PLEASE NOTE

Electrical equipment should be installed, operated, serviced, and maintained only by qualified personnel. No responsibility is assumed by Schneider Electric for any consequences arising out of the use of this material.

A qualified person is one who has skills and knowledge related to the construction and operation of electrical equipment and its installation, and has received safety training to recognize and avoid the hazards involved.

About the Book

At a Glance

Document Scope

This manual describes how to use this product.

Validity Note

This documentation is valid for this product.

The technical characteristics of the device(s) described in this manual also appear online at *http://www.pro-face.com/*.

The characteristics presented in this manual should be the same as those that appear online. In line with our policy of constant improvement we may revise content over time to improve clarity and accuracy. In the event that you see a difference between the manual and online information, use the online information as your reference.

Registered Trademarks

Microsoft and Windows are registered trademarks of Mircrosoft Corporation in the United States and/or other countries.

Product names used in this manual may be the registered trademarks owned by the respective proprietors.

Related Documents

You can download the manuals related to this product, such as the software manual, from our support site at *http://www.pro-face.com/trans/en/manual/1001.html*.

Product Related Information

If the equipment is used in a manner not specified by the manufacturer, the protection provided by the equipment may be impaired.

DANGER

HAZARD OF ELECTRIC SHOCK, EXPLOSION, OR ARC FLASH

- Remove all power from the device before removing any covers or elements of the system, and prior to installing or removing any accessories, hardware, or cables.
- Unplug the power cable from both this product and the power supply.
- Always use a properly rated voltage sensing device to confirm power is off.
- Replace and secure all covers or elements of the system before applying power to this product.
- Use only the specified voltage when operating this product. This product is designed to use 24 Vdc. Always check whether your device is DC powered before applying power.

Failure to follow these instructions will result in death or serious injury.

Critical alarm indicators and system functions require independent and redundant protection hardware and/or mechanical interlocks.

When you cycle power, wait at least 10 seconds after it has been turned off. If this product is restarted too quickly, it may not operate correctly.

In the event the screen cannot be properly read, for example, if the backlight is not functioning, it may be difficult or impossible to identify a function. Functions that may present a hazard if not immediately executed, such as a fuel shut-off, must be provided independently of this product. The machine's control system design must take into account the possibility of the backlight no longer functioning and the operator being unable to control the machine or making mistakes in the control of the machine.

⚠ WARNING

LOSS OF CONTROL

- The designer of any control scheme must consider the potential failure modes of control paths and, for certain critical control functions, provide a means to achieve a safe state during and after a path failure. Examples of critical control functions are emergency stop and overtravel stop, power outage and restart.
- Separate or redundant control paths must be provided for critical control functions.
- System control paths may include communication links. Consideration must be given to the implications of unanticipated transmission delays or failures of the link.
- Observe all accident prevention regulations and local safety guidelines.
- Each implementation of this product must be individually and thoroughly tested for proper operation before being placed into service.
- The machine control system design must take into account the possibility that the emergency stop switch may not work, control lines may be unable to function due to cut cable lines, or the backlight is no longer functioning, and therefore the operator is unable to control the machine or makes errors in the control of the machine.

Failure to follow these instructions can result in death, serious injury, or equipment damage.

For additional information, refer to NEMA ICS 1.1 (latest edition), "Safety Guidelines for the Application, Installation, and Maintenance of Solid State Control" and to NEMA ICS 7.1 (latest edition), "Safety Standards for Construction and Guide for Selection, Installation and Operation of Adjustable-Speed Drive Systems" or their equivalent governing your particular location.

⚠ WARNING

UNINTENDED EQUIPMENT OPERATION

The application of this product requires expertise in the design and programming of control systems. Only persons with such expertise should be allowed to program, install, alter, and apply this product.

Follow all local and national safety standards.

Failure to follow these instructions can result in death, serious injury, or equipment damage.

⚠ WARNING

UNINTENDED EQUIPMENT OPERATION

- Do not use this product as the only means of control for critical system functions such as motor start/stop or power control.
- Do not use this equipment as the only notification device for critical alarms, such as device overheating or overcurrent.
- Use only the software provided with this product. If you use another software, please confirm the operation and safety before use.

Failure to follow these instructions can result in death, serious injury, or equipment damage.

⚠ CAUTION

RISK OF INJURY

- Handle with care. Do not drop this product.
- Do not step on cables.

Failure to follow these instructions can result in injury or equipment damage.

The following characteristics are specific to the LCD panel and are considered normal behavior:

- LCD screen may show unevenness in the brightness of certain images or may appear different when seen from outside the specified viewing angle. Extended shadows, or crosstalk may also appear on the sides of screen images.
- LCD screen pixels may contain black and white colored spots and color display may seem to have changed.
- When the same image is displayed on the screen for a long period, an afterimage may appear when the image is changed.

NOTE: Change the screen image periodically and try not to display the same image for a long period of time.

⚠ CAUTION

SERIOUS EYE AND SKIN INJURY

The liquid in the LCD panel contains an irritant:

- Avoid direct skin contact with the liquid.
- Wear gloves when you handle a broken or leaking unit.
- Do not use sharp objects or tools in the vicinity of the LCD panel.
- Handle the LCD panel carefully to prevent puncture, bursting, or cracking of the panel material.
- If the panel is damaged and any liquid comes in contact with your skin, immediately rinse the area with running water for at least 15 minutes. If the liquid gets in your eyes, immediately rinse your eyes with running water for at least 15 minutes and consult a doctor.

Failure to follow these instructions can result in injury or equipment damage.

Chapter 1
Overview

What Is in This Chapter?

This chapter contains the following topics:

Topic	Page
Model Numbers	12
Package Contents	13
Certifications and Standards	14
Federal Communication Commission Radio Frequency Interference Statement - For USA	16

Model Numbers

Series		Model name	Model number*1
GP4000 Series	GP4000H Series	GP-4311HT	PFXGP4311HTAD
			PFXGP4311HTADER
			PFXGP4311HTADERK
			PFXGP4311HTADEYK
			PFXGP4311HTADEGK

*1 Includes models with additional alphanumeric characters at the end of the model number.

Model Number Configuration

The following describes the configuration of model numbers.

Digit Position	1	2	3	4	5	6	7	8	9	10	11	12	13
	P	F	X	(model)		(series)	(size)	(resolution)		(type)	(LCD)	(touch panel)	(power supply)
				GP		4: GP4000 Series	3: 5.7”	11: VGA		H: Handy	T: TFT color LCD	A: Analog	D: DC24V

14...16
(switch)
N/A: without any Stop Switch and Key Switch ER: with Emergency Stop Switch (Red), without Key Switch ERK: with Emergency Stop Switch (Red) and Key Switch EYK: with Stop Switch (Yellow) and Key Switch EGK: with Stop Switch (Gray) and Key Switch

Global Code

A global code is assigned to every Pro-face product as a universal model number. For more information on product models and their matching global codes, please refer to the following URL.

http://www.pro-face.com/trans/en/manual/1003.html

Package Contents

NOTE: This product has been carefully packed with special attention to quality. However, should you find anything damaged or missing, please contact your local distributor immediately.

Verify all items listed here are present in your package:

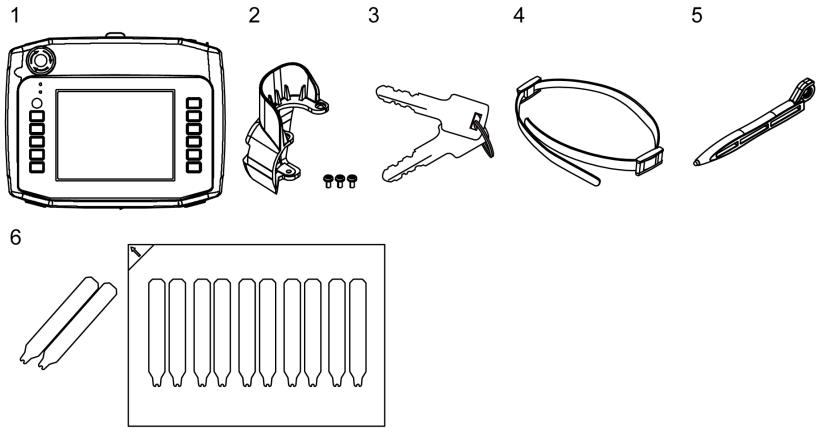

1 GP4000H Series (this product): 1
2 Stop Switch Guard: 1, Attachment Screws: 3
(Only models equipped with an Emergency Stop Switch or a Stop Switch)
3 Key: 2
(Only models equipped with a Key Switch)
4 Hand Strap: 1
5 Touch Pen: 1 (attached to this product)
6 Function Switch Sheet (2 piece/set): 1 set (attached to this product), 5 sets (for replacement)
7 Connector Cover: 1 (attached to this product)
8 GP4000H Series Installation Guide: 1
9 Warning/Caution Information: 1
10 Emergency Stop Switch Instruction Sheet: 1

Revision

You can identify the product version (PV), revision level (RL), and the software version (SV) from the product label.

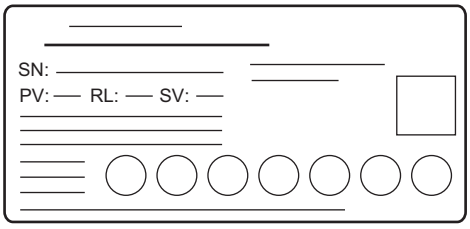

Certifications and Standards

NOTE: The certifications and standards listed below may include those that are not yet acquired for this product. For the latest certifications and standards that this product has acquired, please check the product marking or the following URL.
http://www.pro-face.com/trans/en/manual/1002.html

Agency Certifications

Schneider Electric submitted this product for independent testing and qualification by third-party listing agencies. These agencies have certified this product as meeting the following standards.

- Underwriters Laboratories Inc., UL61010-2-201 and CSA C22.2 N° 61010-2-201, Industrial Control Equipment
- EAC certification (Russia, Belarus, Kazakhstan)

Compliance Standards

Europe:

CE

- Directive 2014/35/EU (Low Voltage)
- Directive 2014/30/EU (EMC)
  - Programmable Controllers: EN61131-2
  - EN61000-6-4
  - EN61000-6-2

Australia

- RCM
  - EN61000-6-4

Korea

- KC
  - KN11
  - KN61000-6-2

Qualifications Standards

Schneider Electric voluntarily tested this product to additional standards. The additional tests performed, and the standards under which the tests were conducted, are specifically identified in Structural Specifications *(see page 29)*.

Hazardous Substances

This product is a device for use in factory systems. When using this product in a system, the system should comply with the following standards in regards to the installation environment and handling:

- WEEE, Directive 2012/19/EU
- RoHS, Directive 2011/65/EU
- RoHS China, Standard SJ/T 11364
- REACH regulation EC 1907/2006

European (CE) Compliance

The product described in this manual comply with the European Directives concerning Electromagnetic Compatibility and Low Voltage (CE marking) when used as specified in the relevant documentation, in application for which they are specifically intended, and in connection with approved third-party products.

KC Markings

사용자안내문

기 종 별	사 용 자 안 내 문
A급 기기 (업무용 방송통신기자재)	이 기기는 업무용(A급) 전자파적합기기로서 판매자 또는 사용자는 이 점을 주의하시기 바라며, 가정외의 지역에서 사용하는 것을 목적으로 합니다.

Federal Communication Commission Radio Frequency Interference Statement - For USA

FCC Radio Interference Information

This product has been tested and found to comply with the Federal Communications Commission (FCC) limits for a Class A digital device, pursuant to Part 15 of the FCC Rules. These limits are designed to provide reasonable protection against harmful interference in a commercial, industrial or business environment. This product generates, uses, and can radiate radio frequency energy and, if not installed and used in accordance with the instructions, may cause or be subject to interference with radio communications. To minimize the possibility of electromagnetic interference in your application, observe the following two rules:

- Install and operate this product in such a manner that it does not radiate sufficient electromagnetic energy to cause interference in nearby devices.
- Install and test this product to ensure that the electromagnetic energy generated by nearby devices does not interfere with the operation of this product.
- Changes or modifications not expressly approved by the party responsible for compliance could void the user's authority to operate this product.

Chapter 2
Device Connectivity

What Is in This Chapter?

This chapter contains the following topics:

Topic	Page
System Design	18
Accessories	19

System Design

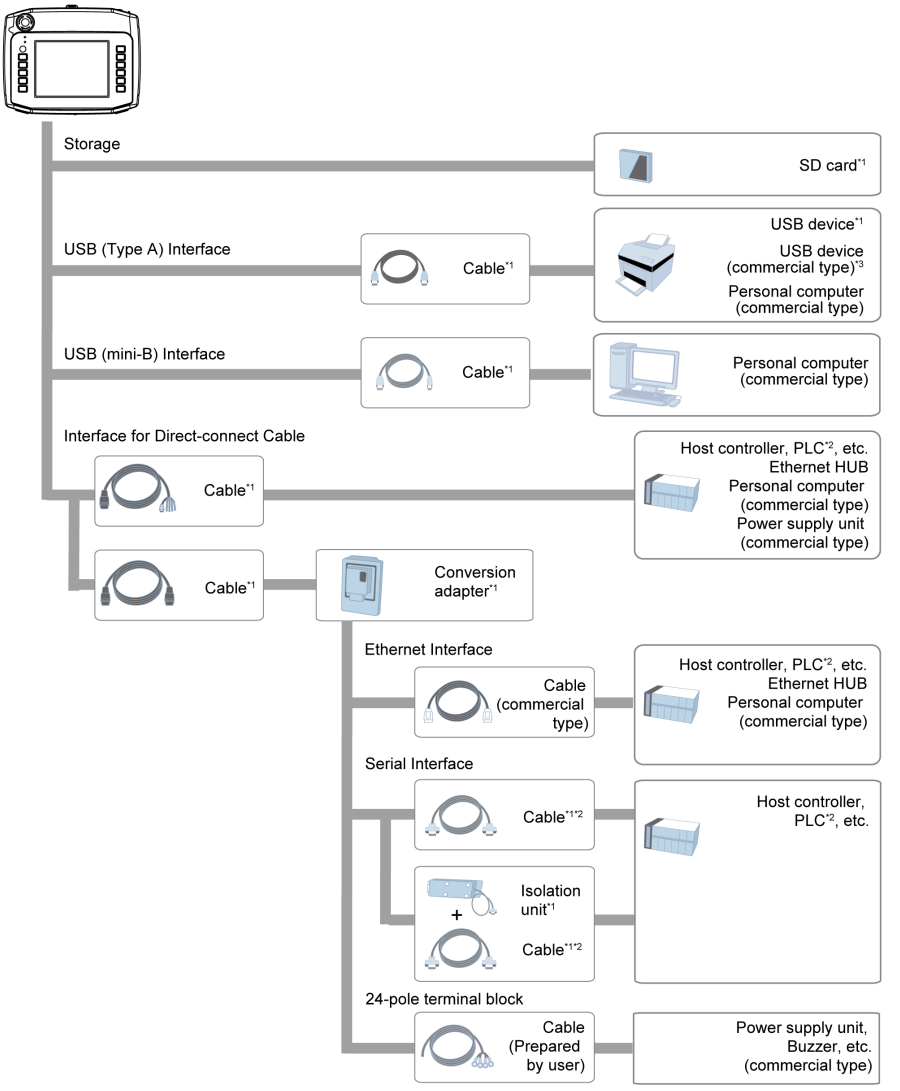

*1 Refer to Accessories (*see page 19*).

*2 For information on how to connect controllers and other types of equipment, refer to the corresponding device driver manual of your screen editing software.

*3 For supported models, refer to our support site (*http://www.pro-face.com/trans/en/manual/1001.html*).

Accessories

For host controllers and connection cables, refer to the corresponding device driver manual of your screen editing software.

Product name		Product number	Description
USB (Type A) interface	USB Transfer Cable (2 m)	CA3-USBCB-01	Downloads project data created with the screen editing software via the display unit's USB I/F.
	USB Cable (5 m)*1	FP-US00	Connects a USB printer. (TYPE-B)
USB (mini-B) interface	USB Transfer Cable (USB Type A/mini-B) (1.8 m)	ZC9USCBMB1	Cable for transferring screen data from a PC (USB Type A) to this product (USB mini-B).
Interface for direct-connect cable	GP3000H Hard-type 10m Direct-connect Cable	GP3000H-CBLH-10M	Heavy-duty type interface cable for communication between this product and external equipment (e.g. host controller), equipped with common mode filter.
	GP3000H Soft-type 3m Direct-connect Cable	GP3000H-CBLS-3M	Standard type interface cable for communication between this product and external equipment (e.g. host controller), equipped with common mode filter.
	GP3000H Soft-type 5m Direct-connect Cable	GP3000H-CBLS-5M	
	GP3000H Soft-type 10m Direct-connect Cable	GP3000H-CBLS-10M	
	GP3000H Hard-type 10m Direct-connect Cable (with connector)	GP3000H-CBLHD-10M	Heavy-duty type cable between the GP3000H Conversion Adapter and this product.
	GP3000H Soft-type 3m Direct-connect Cable (with connector)	GP3000H-CBLSD-3M	Standard type cable between the GP3000H Conversion Adapter and this product.
	GP3000H Soft-type 5m Direct-connect Cable (with connector)	GP3000H-CBLSD-5M	
	GP3000H Soft-type 10m Direct-connect Cable (with connector)	GP3000H-CBLSD-10M	
	GP3000H Conversion Adapter	AGP3000H-ADPCOM-01	Conversion Adapter for interfacing with a Cable Connector and External Output I/F output the following connectors; serial: D-Sub 9 pin (plug), ethernet: modular jack (RJ-45), others: terminal block.
SD Memory Card		PFXZCBSD4GC41	SD Memory Card (4 GB, CLASS4)
Screen Protection Sheet		PFXZCBDS61	Disposable, dirt-resistant sheet for the display (5 sheets/set)
UV Protection Sheet		PFXZCFUV61	Sheet to protect the display from dirt and ultraviolet light.
Neck Strap		GP2000H-STRAP11	Strap for wearing over the neck.
Wall Hanging Adapter		GP3000H-WMA-01	Bracket for mounting this product to a commercially available arm or panel.

*1 Make sure your screen editing software supports the product.

Maintenance Accessories

Product name	Product number	Description
Touch Pen	CA7-TPPEN/ALL-01	Touch pens for screen operation (5 peace).
Hand Strap	GP3000H-HS-01	Strap for hand-held operation.
Stop Switch Guard	GP3000H-EMGD-01	For preventing accidental operation.
Function Switch Sheet	GP3000H-DUPS-01	For changing image of the function switches. 5 sheets/set (x 5)

Accessories for the GP3000H Conversion Adapter

Product name	Product number	Description
RS-232C Isolation Unit	CA3-ISO232-01	Connects a host controller to this adapter with provides isolation. (RS-232C and RS-422 are switchable.)

Maintenance Accessories for the GP3000H Conversion Adapter

Product name	Product number	Description
Installation Gasket	GP3000H-WPGADP-01	Provides dust and moisture resistance when GP3000H Conversion Adapter is installed into a solid panel.

Chapter 3
Parts Identification and Functions

What Is in This Chapter?

This chapter contains the following topics:

Topic	Page
Parts name and functions	22
LED Indications	24

Parts Name and Functions

Side	GP-4311H
Front	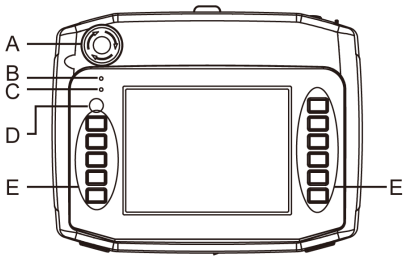
Top	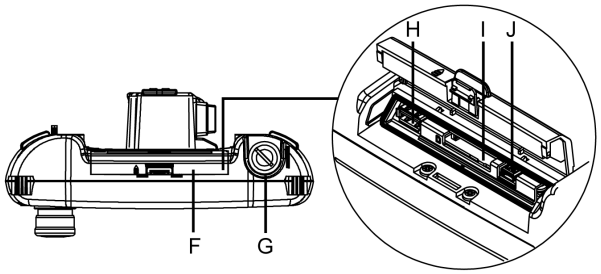
Right and Rear	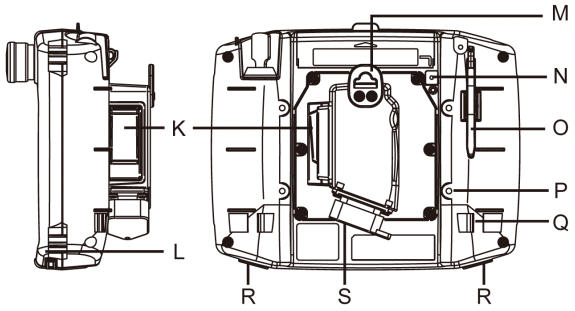

A: Emergency stop switch / Stop switch (*see page 42)*

B: Status LED (POWER) (*see page 24*)

C: Operation LED (O.P.) (*see page 24*)

D: Operation switch

When the operation switch function is enabled in the screen editing software, accepts inputs from the touch panel or function keys only while the operation switch is pressed. For details, refer to the manual of your screen editing software.

E: Function switches

Use your screen editing software to set up operations associated with switches. For details, refer to the manual of your screen editing software.

F: Maintenance cover

G: Key switch (*see page 44*)

H: USB (Type A) interface

I: SD card slot

J: USB (mini-B) interface

K: 3-position enable switch (*see page 43)*

L: Neck strap attachment slot

M: Hanger

Hanger for temporarily hanging this product on a wall. We recommend the panel, hooks and screws defined below for use with the Hanger.

Panel	Panel thickness: 1 to 1.6 mm (0.04 to 0.06 in)*1 Panel width: 14 mm (0.55 in) or more.
Hook	Diameter 7 mm (0.27 in) or less, Rod-shaped or S-shaped hook.
Screw	M4 pan-head machine screws. Head diameter of 7 mm (0.27 in) or less.

*1 Even if the installation wall thickness is within the recommended range, depending on wall's material, size, and installation location of this product and other devices, the installation wall could warp. To prevent warping, the installation surface may need to be strengthened.

N: SD card access LED (*see page 24*)

O: Touch pen

P: Wall hanging adapter attachment slots

By attaching a Wall Hanging Adapter (model number: GP3000H-WMA-01), you can secure this product to a panel or commercially available arm.

Q: Hand strap attachment slots

R: Insertion hole (with cover) for function switch sheet

S: Interface for direct-connect cable (with connector cover) (*see page 38*)

LED Indications

Status LED

Color	Indicator	HMI operation	Logic program operation*1
Green	ON	Offline	-
		In operation	RUN
	Flashing	In operation	STOP
	LED fade*1	Backlight OFF (Standby Mode)	
Orange	Flashing	Software starting up.	
Red	ON	Power is ON.	
	Flashing	In operation	Major error
-	OFF	Power is OFF.	

*1 Make sure your screen editing software supports the function.

Operation LED

Color	Indicator	Description
Green	ON	Indicates the Operation Switch is ON.
-	OFF	Indicates the Operation Switch is OFF.

SD card access LED

Color	Indicator	Description
Green	ON	The SD Card is inserted.
-	OFF	The SD Card is not inserted or is not being accessed.

Chapter 4
Specifications

What Is in This Chapter?

This chapter contains the following sections:

Section	Topic	Page
4.1	General Specifications	26
4.2	Functional Specifications	31
4.3	Interface Specifications	34

Section 4.1
General Specifications

What Is in This Section?

This section contains the following topics:

Topic	Page
Electrical Specifications	27
Environmental Specifications	28
Structural Specifications	29

Electrical Specifications

Power supply	Rated input voltage		24 Vdc
	Input voltage limits		19.2...28.8 Vdc
	Voltage drop		10 ms or less
	Power consumption	Maximum Power Consumption	12 W or less
		When power is not supplied to external devices	8 W or less
	In-rush current		35 A or less
Voltage endurance			500 Vac, 20 mA for 1 minute (between charging and FG terminals)
Insulation resistance			500 Vdc, 10 MΩ or more (between charging and FG terminals)

Environmental Specifications

Physical environment	Surrounding air temperature	0...40 °C (32...104 °F)
	Storage temperature	-20...60 °C (-4...140 °F)
	Surrounding air and storage humidity	10...90% RH (Non condensing, wet bulb temperature 39 °C [102.2 °F] or less)
	Dust	0.1 mg/m^3 (10^{-7} oz/ft^3) or less (non-conductive levels)
	Pollution degree	For use in Pollution Degree 2 environment
	Corrosive gases	Free of corrosive gases
	Atmospheric pressure (operating altitude)	800...1,114 hPa (2,000 m [6,561 ft] or lower)
Mechanical environment	Vibration resistance	IEC/EN 61131-2 compliant 5...9 Hz Single amplitude 3.5 mm (0.14 in) 9...150 Hz Fixed acceleration: 9.8 m/s^2 X, Y, Z directions for 10 cycles (approximately 100 minutes)
	Shock resistance	IEC/EN 61131-2 compliant 147 m/s^2, X, Y, Z directions for 3 times
	Drop resistance	IEC 61131-2 compliant 1.0 m [3.3 ft] drop - 2 times
Electrical environment	Noise immunity	Noise voltage: 1,000 Vp-p Pulse duration: 1 µs Rise time: 1 ns (via noise simulator)
	Electrostatic discharge immunity	Contact discharge method: 6 kV (IEC/EN 61000-4-2 Level 3)

NOTE: When using any of this product's options, check the specifications for any special conditions or cautions that may apply.

Air quality requirements

Do not operate or store the panel where chemicals evaporate, or where chemicals are present in the air:

- Corrosive chemicals: Acids, alkalines, liquids containing salt.
- Flammable chemicals: Organic solvents.

⚠ CAUTION

INOPERATIVE EQUIPMENT

Do not allow water, liquids, metal, and wiring fragments to enter this product.

Failure to follow these instructions can result in injury or equipment damage.

Structural Specifications

Grounding	Functional grounding: Grounding resistance of 100 Ω, 2 mm^2 (AWG 14) or thicker wire, or your country's applicable standard (same for FG and SG terminals).
Cooling method	Natural air circulation
Structure*1	Equivalent to IP65F*2
External dimensions (W x H x D)	224 x 178.3 x 87.8 mm (8.82 x 7.02 x 3.46 in): without any Stop Switch 224 x 178.3 x 107.7 mm (8.82 x 7.02 x 4.24 in): with an Emergency Stop Switch or a Stop Switch Refer to Dimensions (*see page 49*).
Weight	910 g (2.01 lb) or less: without a Key Switch, unit only 960 g (2.12 lb) or less: with a Key Switch, unit only

*1 This product has been tested using conditions equivalent to the standards shown in the specification. Even though this product's level of resistance is equivalent to these standards, oils that should have no effect on this product can possibly harm this product. This can occur in areas where either vaporized oils are present, or where low viscosity cutting oils are allowed to adhere to this product for long periods of time. If this product 's front face protection sheet peels off, these conditions can lead to the ingress of oil into this product and separate protection measures are suggested.

Also, if non-approved oils are present, they may cause deformation or corrosion of the front face's plastic cover. Therefore, prior to using this product, be sure to confirm the type of conditions that will be present in this product 's operating environment.

*2 When your product version (PV) is "01", its rating is IP65. Refer to the product label to check the version. (*see page 13)*

NOTE: IP65F is not part of the UL certification.

⚠ CAUTION

EQUIPMENT DAMAGE

- Ensure this product is not in permanent and direct contact with oils.
- Do not press on the display of this product with excessive force or with a hard object.
- Do not press on the touch panel with a pointed object, such as the tip of a mechanical pencil or a screwdriver.

Failure to follow these instructions can result in injury or equipment damage.

⚠ CAUTION

EQUIPMENT DAMAGE

Do not expose the device to direct sunlight.

Failure to follow these instructions can result in injury or equipment damage.

NOTICE

STORAGE AND OPERATION OUTSIDE OF SPECIFICATIONS

- Store this product in areas where temperatures are within the product's specifications.
- Do not restrict or block this product's ventilation slots.

Failure to follow these instructions can result in equipment damage.

Section 4.2
Functional Specifications

What Is in This Section?

This section contains the following topics:

Topic	Page
Display Specifications	32
Memory, Clock, Touch Panel	33

Display Specifications

Display type	TFT Color LCD
Display size	5.7”
Resolution	640 x 480 pixels (VGA)
Effective display area (W x H)	115.2 x 86.4 mm (4.54 x 3.4 in)
Display colors	65,536 colors (No blink) / 16,384 colors (Blink) For details about display colors, refer to the manual for your screen editing software.
Backlight	White LED (Not user replaceable. When replacement is required, contact your local distributor.)
Backlight service life	50,000 hours or more (continuous operation at 25 °C [77 °F] before backlight brightness decreases to 50%
Brightness control	16 levels (Adjusted with touch panel)

Memory, Clock, Touch Panel

Memory

System memory	Flash EPROM 128 MB Operating system, project data (screen data)*1 and other data
Backup memory	SRAM 512 KB*1*2

*1 Amount of memory you can use differs depending on your screen editing software. Refer to the manual for your screen editing software.
*2 Rechargeable lithium battery for backup memory.

Clock

± 65 seconds per month (deviation at room temperature and power is OFF). Variations in operating conditions can cause clock deviations from -380 to +90 seconds per month.

For systems where this level of precision is insufficient, the user should monitor and make adjustments when required.

NOTE:

- When a message appears to indicate it is time to charge the battery, supply power to this product and fully charge it. In 24 hours the battery charges to a level that allows backup operation. Completing a full charge requires about 120 hours (5 days).
- The lithium battery's lifetime is: 10 years when the battery's ambient temperature is 40 °C (104 °F) or less, 4.1 years when the battery's ambient temperature is 50 °C (122 °F) or less, and 1.5 years when the battery's ambient temperature is 60 °C (140 °F) or less.
  When used for backup:
  Approximately 100 days, with a fully charged battery.
  Approximately 6 days, with a half-charged battery.

Touch Panel

Touch panel type	Resistive film (analog)
Touch panel resolution	1,024 x 1,024
Touch panel service life	1 million times or more

Section 4.3
Interface Specifications

What Is in This Section?

This section contains the following topics:

Topic	Page
Interface Specifications	35
Interface Connection	37
Interface for direct-connect cable	38
Serial Interface	40
Emergency Stop Switch / Stop Switch Output Interface	42
3-Position Enable Switch Output Interface	43
Key Switch Output Interface	44
DC Power Interface	45
Connecting the Power Supply	46
Grounding	48

Interface Specifications

USB (Type A) interface		Connector	USB 2.0 (Type A) x 1
		Power supply voltage	5 Vdc ±5%
		Maximum current supplied	500 mA/port
		Maximum transmission distance	Less than 5 m (16.4 ft)
USB (mini-B) interface		Connector	USB 2.0 (mini-B) x 1
		Maximum transmission distance	Less than 5 m (16.4 ft)
SD card interface		SD card	slot x 1, SD/SDHC card of up to 32 GB.
Interface for direct-connect cable	Serial interface	Asynchronous transmission	RS-232C/RS-422/RS-485
		Data length	7 or 8 bits
		Stop bit	1 or 2 bits
		Parity	None, odd, or even
		Data transmission speed	2,400...115,200 bps, 187,500 bps (MPI)
		Maximum communication distance*1	When using RS-232C: 15 m (49.2 ft) When using RS-422 at 115,200 bps: 1,200 m (3,937 ft)
	Ethernet interface	Standard	IEEE802.3i/IEEE802.3u, 10BASE-T/100BASE-TX
		Maximum communication distance*1	100 m (328.1 ft)
	Emergency stop switch / stop switch output interface	Contacts	a-contact (normally open): 1 b-contact (normally closed): 2
		Rated voltage	30 Vdc
		Maximum rated current	1 A (minimum allowable load: 5 Vdc, 1 mA)
		Standard*2	IEC/EN 60947-5-1, 60947-5-5 UL508, CSA C22.2 No.14
	3-Position enable switch output interface	Contacts	a-contact (normally open): 2
		Rated voltage	30 Vdc
		Maximum rated current	700 mA (minimum allowable load: 3 Vdc, 5 mA)
		Standards*2	IEC/EN 60947-5-8, 60204-1 UL508, CSA C22.2 No.14 ISO 12100/EN 12100-1, 2 ISO 11161/prEN 11161 ISO 10218/EN 775 ANSI/RIA R15.06, ANSI B11.19
	Key switch output interface	Contacts	c-contact: 1 (can be set normally open or normally closed)
		Rated voltage	24 Vdc
		Maximum rated current	300 mA

	External output interface*3	DOUT output	Open collector output	2 points (function switches, F1 and F2 keys)
			Rated voltage	24 Vdc
			Maximum rated current	300 mA/point
		Operation output	Open collector output	1 point
			Rated voltage	24 Vdc
			Maximum rated current	300 mA
		External Buzzer output	Open collector output	1 point
			Rated voltage	24 Vdc
			Maximum rated current	300 mA

*1 When using the Conversion Adapter (model number: AGP3000H-ADPCOM-01), the distance includes the cable length between this product and the Conversion Adapter.
*2 Overall system may not meet these standards if implemented outside these parameters. Follow these standards when designing the system.
*3 The conversion adapter is required to use the external output interface (DOUT) and build a system. For details, refer to the installation guide of conversion adapter.

Interface Connection

Cable Connections

A direct-connect cable (sold separately) is required to connect to external devices for communication, power, or wiring of switches.

A conversion adapter (model number: AGP3000H-ADPCOM-01) is required to build a system with an external output interface, such as DOUT.

NOTE:

- For the kinds of the direct-connect cable, refer to Accessories *(see page 19)*.
- UL certification has been achieved for this product with the conversion adapter, and with the direct-connect cables.
- For details on the conversion adapter, refer to the installation guide of conversion adapter.
- For instructions on how to connect to other devices, always refer to the corresponding device driver manual of your screen editing software.
- Use only the SELV (Safety Extra-Low Voltage) circuit to connect the COM, USB, and LAN interfaces.

⚠ ⚠ DANGER

HAZARD OF ELECTRIC SHOCK, EXPLOSION, OR ARC FLASH

- Remove all power from the device before removing any covers or elements of the system, and prior to installing or removing any accessories, hardware, or cables.
- Unplug the power cable from both this product and the power supply.
- Always use a properly rated voltage sensing device to confirm power is off.
- Replace and secure all covers or elements of the system before applying power to this product.
- Use only the specified voltage when operating this product. This product is designed to use 24 Vdc. Always check whether your device is DC powered before applying power.

Failure to follow these instructions will result in death or serious injury.

⚠ CAUTION

EQUIPMENT DAMAGE

- To prevent damage, do not allow the cable's connector to drop or hit against anything hard.
- Connect peripheral equipment first, and connect this product last. Otherwise, the RS-232C/RS-422/RS-485 circuit may become inoperable.
- Properly terminate unused wires to help avoid short-circuits by other signals or metal parts.
- After cable length adjustment, connect the shield on the cable to the FG terminal.

Failure to follow these instructions can result in injury or equipment damage.

Interface for Direct-connect Cable

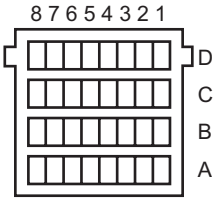

(Cable side)

Pin No.	Signal name	Description	Cable color / Marking color, number*1
D7	KEY_NC	Key switch output signal b-contact: normally closed Rating: 24 Vdc, 300 mA	Orange/None
D8	KEY_NO	Key switch output signal a-contact: normally open Rating: 24 Vdc, 300 mA	Orange/Black 1
C7	ENB0A	3-position enable switch output signal a-contact: normally open Rating: 30 Vdc, 700 mA	Blue/Black 2
B7	ENB0B	3-position enable switch output signal a-contact: normally open	Blue/Black 3
A6	ENB1A	3-position enable switch output signal a-contact: normally open Rating: 30 Vdc, 700 mA	Blue/None
A7	ENB1B	3-position enable switch output signal a-contact: normally open	Blue/Black 1
C6	EMG0A	Emergency stop switch / stop switch output signal a-contact: normally open Rating: 30 Vdc, 1 A	Purple/Black 2
B6	EMG0B	Emergency stop switch / stop switch output signal a-contact: normally open	Purple/White 3
A5	EMG1A	Emergency stop switch / stop switch output signal b-contact: normally closed Rating: 30 Vdc, 1 A	Purple/Black 1
D6	EMG1B	Emergency stop switch / stop switch output signal b-contact: normally closed	Purple/White 2
C5	EMG2A	Emergency stop switch / stop switch output signal b-contact: normally closed Rating: 30 Vdc, 1 A	Purple/None
B5	EMG2B	Emergency stop switch / stop switch output signal b-contact: normally closed	Purple/White 1

Pin No.	Signal name		Description		Cable color / Marking color, number*1
D3	(When the RS-232C is used) CD	(When the RS-422 or RS485 is used) RDA	Serial signal *(see page 40)*		Brown/White 1
D4	RD (RXD)	RDB			Brown/Black 1
C3	SD (TXD)	SDA			Brown/White 2
C4	RS (RTS)	SDB			Brown/Black 2
D5	SG	SG			Brown/None
B3	ER (DTR)	ERA			Brown/White 4
B4	CI (RI)/VCC*2	ERB			Brown/Black 4
A3	CS (CTS)	CSA			Brown/White 3
A4	DR (DSR)	CSB			Brown/Black 3
D1	TX+		Output	Ethernet send (+)	Blue/None
C1	TX-		Output	Ethernet send (-)	White/None
B1	RX+		Input	Ethernet received (+)	Brown/None
A1	RX-		Input	Ethernet received (-)	Gray/None
C8	24 Vdc		Input	Power input 24 Vdc	Red/None
B8	0 Vdc		Input	Power input 0 Vdc	Black/None
A8	FG		–	Frame ground (common with SG)	Green/None*3
D2	SIO TX		Output	Conversion Adapter communication signal	-
C2	SIO RX		Input		-
B2	SIO RTS		Output		-
A2	SIO CTS		Input		-

*1 Identifies the cable color when using the direct-connect cable (no connector).

*2 The RI/VCC selection is switched via software. The VCC output is not protected against over current. To prevent damage or malfunction, use only within the rated current.

*3 Among the two green cables, use AWG 22 cable for serial signals, and AWG 16 cable for DC power.

Serial Interface

Introduction

For information on how to connect controllers and other types of equipment, refer to the corresponding device driver manual of your screen editing software.

Connect to the D-SUB 9-pin plug type connector.

You can switch the communication method between RS-232C and RS-422/RS-485 via the software.

The serial interface is not isolated. The SG (signal ground) and the FG (functional ground) terminals are connected inside this product.

⚠ ⚠ DANGER

ELECTRIC SHOCK AND FIRE

When using the SG terminal to connect an external device to this product:
- Verify that a short-circuit loop is not created when you set up the system.
- Connect the SG terminal to remote equipment when the external device is not isolated.
- Connect the SG terminal to a known reliable ground connection to reduce the risk of damaging the circuit.

Failure to follow these instructions will result in death or serious injury.

NOTE: Use within the rated current.

RS-232C

RS-232C		
Signal name	**Direction**	**Meaning**
CD	Input	Carrier detect
RD (RXD)	Input	Receive data
SD (TXD)	Output	Send data
ER (DTR)	Output	Data terminal ready
SG	–	Signal ground
DR (DSR)	Input	Data set ready
RS (RTS)	Output	Request to send
CS (CTS)	Input	Send possible
CI (RI)/VCC*1	Input	Called status display 5 Vdc ±5% Output 0.25 A
FG	–	Frame ground (common with SG)

*1 The RI/VCC selection is switched via software. The VCC output is not protected against over current. To prevent damage or malfunction, use only within the rated current.

Interfit bracket is #4-40 (UNC).

Recommendations:

- Cable Connector: XM3D-0921 manufactured by OMRON Corporation.
- Cable Cover: XM2S-0913 manufactured by OMRON Corporation.
- Jack Screw (#4-40 UNC): XM2Z-0073 manufactured by OMRON Corporation.

The direct-connect cable's serial interface is not isolated. When the host (PLC) unit is also not isolated, be sure to connect the SG (Signal Ground) terminal.

You can set up isolation with the RS-232C Isolation Unit (model number CA3-ISO232-01) and the following recommended equipment.

Recommendations:

- Intermediate Connector: XM3A-0921 manufactured by OMRON Corporation.
- Cable Cover: XM2S-0913 manufactured by OMRON Corporation.
- Fastener 1: XM2Z-0003 manufactured by OMRON Corporation.

RS-422/RS-485

RS-422/RS-485		
Signal name	**Direction**	**Meaning**
RDA	Input	Receive data A (+)
RDB	Input	Receive data B (-)
SDA	Output	Send data A (+)
ERA	Output	Data terminal ready A (+)
SG	–	Signal ground
CSB	Input	Send possible B (-)
SDB	Output	Send data B (-)
CSA	Input	Send possible A (+)
ERB	Output	Data terminal ready B (-)
FG	–	Frame ground (common with SG)

Interfit bracket is #4-40 (UNC).

Recommendations:

- Cable Connector: XM3D-0921 manufactured by OMRON Corporation.
- Cable Cover: XM2S-0913 manufactured by OMRON Corporation.
- Jack Screw (#4-40 UNC): XM2Z-0073 manufactured by OMRON Corporation.

Emergency Stop Switch / Stop Switch Output Interface

With this product incorporating an emergency stop switch or stop switch, the switch activates the contact output, when the switch is enabled. To reset the stop status (lock status), pull the button forward, or turn the button in the direction indicated by the arrow.

When the switch is pressed, the ON/OFF status are as follows:

Contact state in brackets ( ).

Signal name	Stop reset	Stop
EMG0	0 (OFF)	1 (ON)
EMG1	1 (ON)	0 (OFF)
EMG2	1 (ON)	0 (OFF)

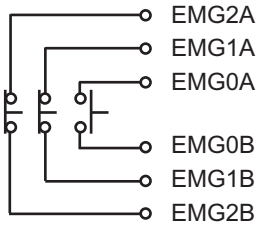

NOTE: When using a model without an emergency stop switch or a stop switch, disconnect (NC) these signal lines.

3-Position Enable Switch Output Interface

The 3-position enable switch has three positions: 1) Not pressed (released position), 2) Pressed to the intermediate position, 3) Pressed to the innermost position (fully closed).

The continuity between ENB0 to ENB1 during each position of the switch is as follows.

Contact state in brackets ( ).

Signal name	Not pressed	Pressed to the intermediate position	Pressed to the innermost position
ENB0	0 (OFF)	1 (ON)	0 (OFF)
ENB1	0 (OFF)	1 (ON)	0 (OFF)

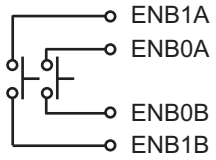

NOTE: The contact is OFF when the switch is pressed to the innermost position then returned to the not pressed position.

Key Switch Output Interface

Turning the key turns this product's power supply ON or OFF.

Signal name	Turn OFF this product	Turn ON this product
KEY_NO	0 (OFF)	1 (ON)
KEY_NC	1 (ON)	0 (OFF)

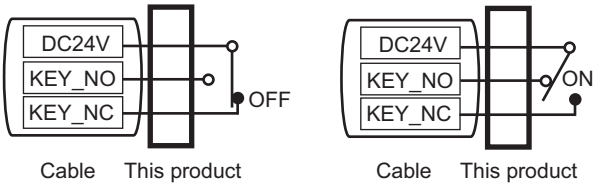

NOTE:

- When the key is not turned to ON or OFF, either the “KEY_NO” or the “KEY_NC” signal is ON. These signals will not simultaneously turn OFF.
- These signal lines must be disconnected (NC) when the model without a key switch is used.

DC Power Interface

Connecting the DC Power Cord

⚠ ⚠ DANGER

HAZARD OF ELECTRIC SHOCK, EXPLOSION, OR ARC FLASH

- Remove all power from the device before removing any covers or elements of the system, and prior to installing or removing any accessories, hardware, or cables.
- Unplug the power cable from both this product and the power supply.
- Always use a properly rated voltage sensing device to confirm power is off.
- Replace and secure all covers or elements of the system before applying power to this product.
- Use only the specified voltage when operating this product. This product is designed to use 24 Vdc power. Always check whether your device is DC powered before applying power.
- Be sure to ground this product's FG terminal.

Failure to follow these instructions will result in death or serious injury.

NOTE:

- The SG (signal ground) and FG (functional ground) terminals are connected internally in this product.
- When the FG terminal is connected, be sure the wire is grounded. Not grounding this product can result in excessive electromagnetic interference (EMI).

Connecting the Power Supply

Precautions

- Use copper wire rated for 60 °C (140 °F).
- When using the direct-connect cable (no connector), it's recommended to use the provided common mode filter on the cable to reduce noise.

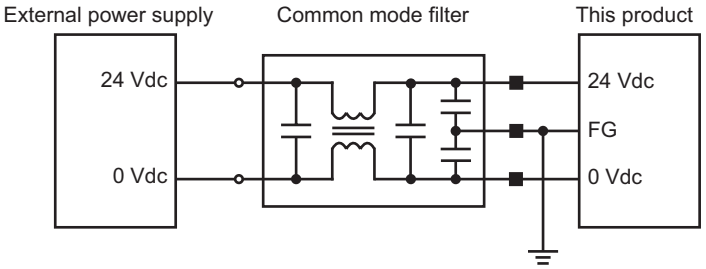

■ The black square indicates the connection point for the direct-connect cable and common field filter.

NOTE: The above image is an example internal circuit for a common mode filter. For the actual circuit in use, refer to the specifications of your common mode filter.

Improving Noise/Surge Resistance

- This product’s power supply cord should not be bundled with or kept close to main circuit lines (high voltage, high current), power lines, or input/output lines, and their various systems should be kept separate. When power lines cannot be wired via a separate system, use shielded cables for input/output lines.
- Make the power cord as short as possible, and be sure to twist the ends of the wires together (i.e. twisted pair cabling) from close to the power supply unit.
- If there is an excess amount of noise on the power supply line, connect a noise reducing transistor before turning on the power.
- Connect a lightning surge absorber device to handle power surges.
- To increase noise resistance, attach a ferrite core to the power cable.

Power Supply Connections

- When supplying power to this product, connect the power as shown below.

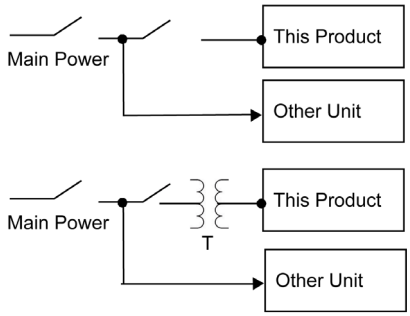

- Use SELV (Safety Extra-Low Voltage) circuit and LIM (Limited Energy circuit) for DC power.
- The following shows a lightning surge absorber connection:

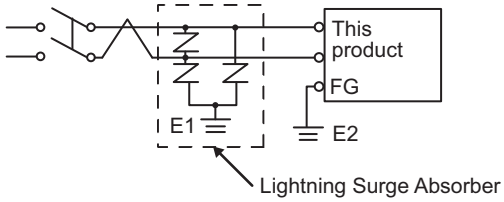

  - Ground the surge absorber (E1) separately from this product (E2).
  - Select a surge absorber that has a maximum circuit voltage greater than that of the peak voltage of the power supply.
- If the voltage variation is outside the prescribed range, connect a regulated power supply.

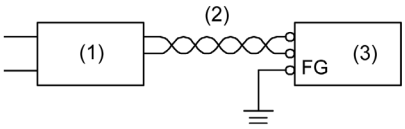

1 Regulated power supply
2 Twisted-pair cord
3 This product

- Select a power supply low in noise for between the line and ground. If there is an excessive amount of noise, connect an insulating transformer.
  Use isolating transformers with capacities exceeding the maximum power consumption (*see page 27*).

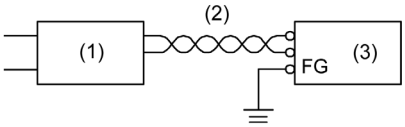

1 Insulating transformer
2 Twisted-pair cord
3 This product

Grounding

Exclusive Grounding

Always ground the FG (functional ground) terminal. Be sure to separate this product from the FG of other devices as shown below.

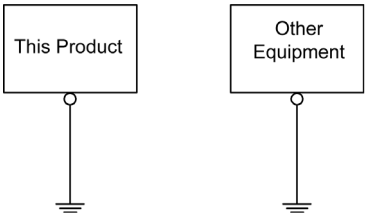

Precautions

- Check that the grounding resistance is 100 Ω or less.*1
- The FG wire should have a cross sectional area greater than 2 mm^2 (AWG 14)*1. Create the connection point as close to this product as possible, and make the wire as short as possible. When using a long grounding wire, replace the thin wire with a thicker wire, and place it in a duct.
- The SG (signal ground) and FG (functional ground) terminals are connected internally in this product. When connecting the SG line to another device, be sure that no shorting loops are formed.

*1 Observe local codes and standards.

Common Grounding

Electromagnetic Interference (EMI) can be created if devices are improperly grounded. EMI can cause loss of communication. If exclusive grounding is not possible, use a common grounding point as shown in the configuration below. Do not use any other configuration for common grounding.

Correct grounding

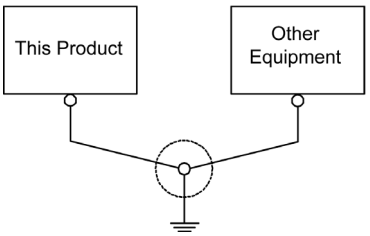

Incorrect grounding

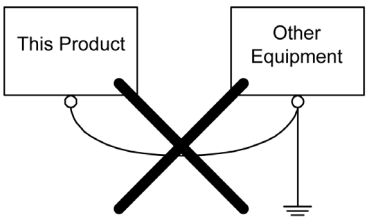

Chapter 5
Dimensions

What Is in This Chapter?

This chapter contains the following topics:

Topic	Page
External Dimensions	50
Dimensions with Emergency Switch Guard	52

External Dimensions

Models with an Emergency Stop Switch or Stop Switch

NOTE: External view is shown using first angle projection method.

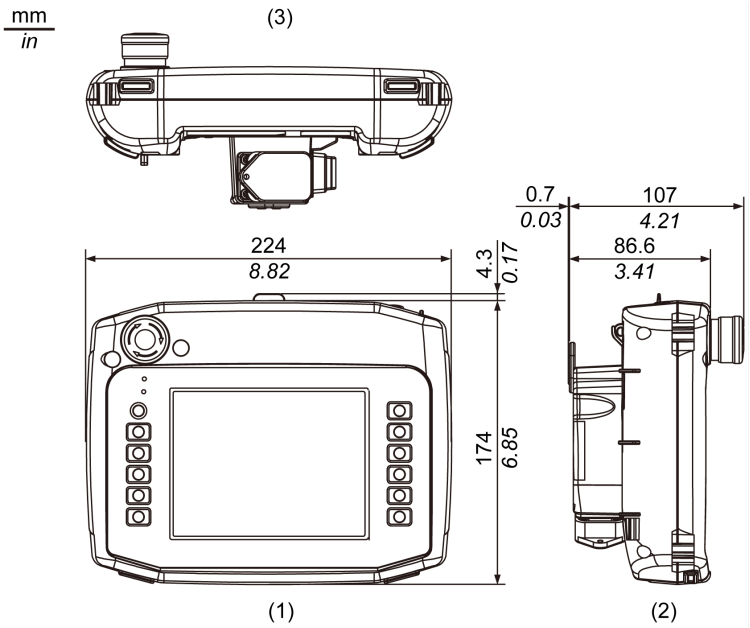

1 Front
2 Left
3 Bottom

Models without any Stop Switch

NOTE: External view is shown using first angle projection method.

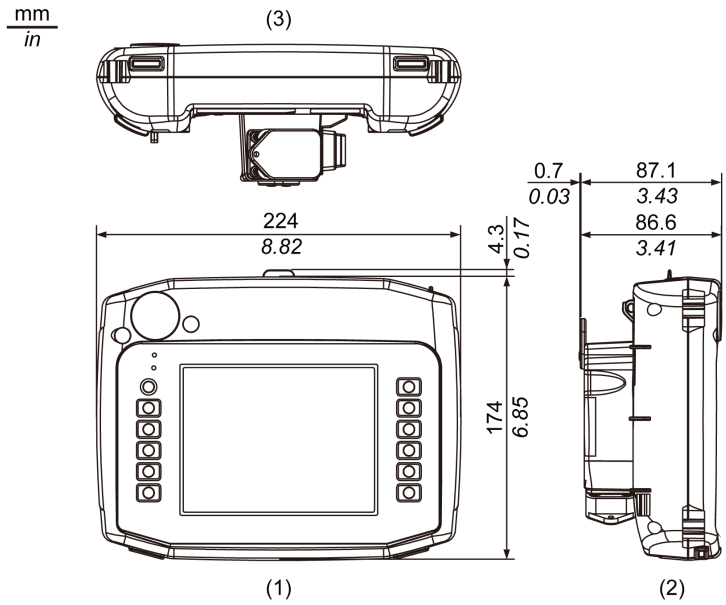

1 Front
2 Left
3 Bottom

Dimensions with a Stop Switch Guard

NOTE: External view is shown using first angle projection method.

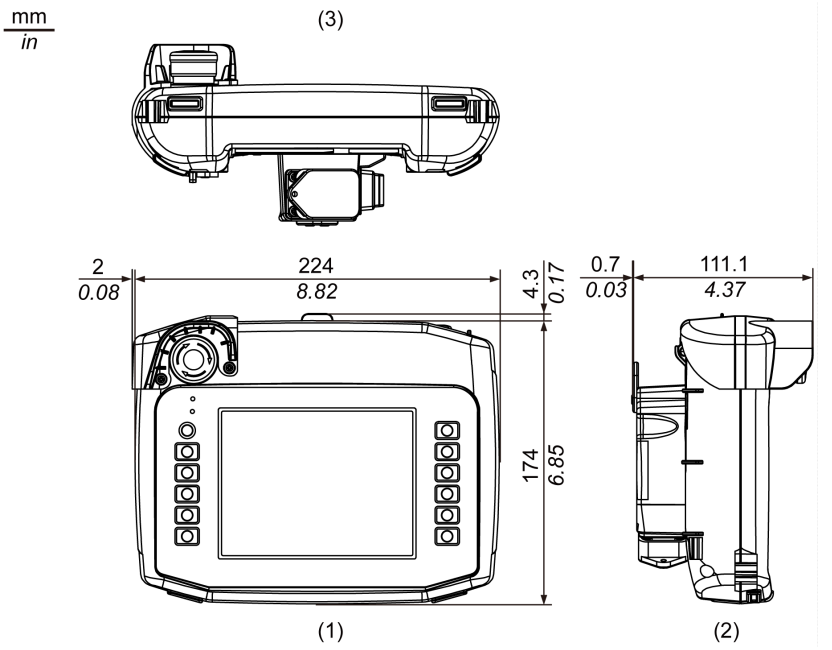

1 Front
2 Left
3 Bottom

External Dimensions of the Stop Switch Guard

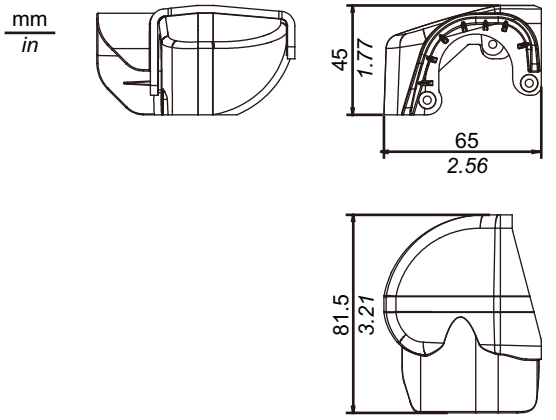

Chapter 6
Installation

What Is in This Chapter?

This chapter contains the following sections:

Section	Topic	Page
6.1	Fixing This Product	54
6.2	Direct-connect Cable Attaching/Removing	59
6.3	Attaching the Stop Switch Guard	63
6.4	Replacing the Function Switch Sheet	64
6.5	SD card Insertion/Removal	65

Section 6.1
Fixing This Product

What Is in This Section?

This section contains the following topics:

Topic	Page
Introduction	55
Hand Strap	56
Neck Strap	57
Wall Hanging Adapter	58

Introduction

⚠ ⚠ DANGER

HAZARD OF ELECTRIC SHOCK, EXPLOSION, OR ARC FLASH

- Remove all power from the device before removing any covers or elements of the system, and prior to installing or removing any accessories, hardware, or cables.
- Unplug the power cable from both this product and the power supply.
- Always use a properly rated voltage sensing device to confirm power is off.
- Replace and secure all covers or elements of the system before applying power to this product.

Failure to follow these instructions will result in death or serious injury.

⚠ CAUTION

EQUIPMENT DAMAGE

- Use this product attached properly to a hand strap, neck strap (sold separately), or a wall hanging adapter (sold separately).
- Do not operate or wire this product while it is hang on the wall with the Hanger, attached to the rear.

Failure to follow these instructions can result in injury or equipment damage.

Be aware of the following:

- This product is not designed for outdoor use. UL certification obtained is for indoor use only.

Hand Strap

Attaching the Hand Strap

Attach the hand strap (included) to this product when holding and operating this product with your hands. The hand strap helps prevent this product from dropping during use.

Step	Action
1	Insert the hand strap into the hand strap mounting slots on the rear of this product, as shown. 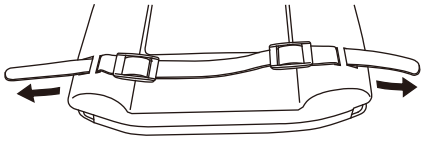
2	Insert both ends of the hand strap into the buckles as shown, and fasten them securely. 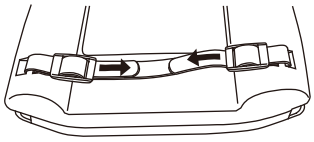

Neck Strap

Attaching the Neck Strap

Attach the neck strap (model number: GP2000H-STRAP11) to this product so that the product can hang from your neck. The neck strap helps prevent this product from dropping during use.

Step	Action
1	First remove the neck straps from the buckles on both ends. Next, insert the ends of the neck straps into the neck strap mounting slots, as shown. 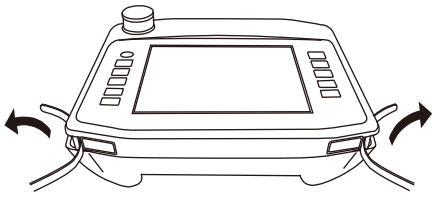
2	Insert the neck straps into the buckles as shown, and fasten them securely. 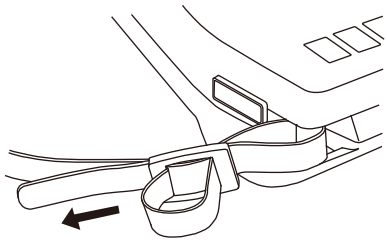

NOTE: Hang the neck strap around your neck when operating this product.

Wall Hanging Adapter

Attaching the Wall Hanging Adapter

You can mount this product to a wall or a commercially available arm with the Wall Hanging Adapter (model number: GP3000H-WMA-01). For details, refer to the Wall Hanging Adapter installation guide.

Section 6.2
Direct-connect Cable Attaching/Removing

What Is in This Section?

This section contains the following topics:

Topic	Page
Introduction	60
Attaching the Cable	61
Removing the Cable	62

Introduction

⚠ ⚠ DANGER

HAZARD OF ELECTRIC SHOCK, EXPLOSION, OR ARC FLASH

- Remove all power from the device before removing any covers or elements of the system, and prior to installing or removing any accessories, hardware, or cables.
- Unplug the power cable from both this product and the power supply.
- Always use a properly rated voltage sensing device to confirm power is off.
- Replace and secure all covers or elements of the system before applying power to this product.

Failure to follow these instructions will result in death or serious injury.

⚠ CAUTION

EQUIPMENT DAMAGE

- To prevent damage, do not allow the cable's connector to drop or hit against anything hard.
- Connect peripheral equipment first, and connect this product last. Otherwise, the RS-232C/RS-422/RS-485 circuit may become inoperable.
- Properly terminate unused wires to help avoid short-circuits by other signals or metal parts.
- After cable length adjustment, connect the shield on the cable to the FG terminal.

Failure to follow these instructions can result in injury or equipment damage.

⚠ CAUTION

RISK OF INJURY

- Handle with care. Do not drop this product.
- Do not step on cables.

Failure to follow these instructions can result in injury or equipment damage.

Attaching the Cable

Step	Action
1	Before connection, remove the cable's connector cap and this product's connector cover. To remove the cable's connector cap, pull out the cable by holding the cable connector. 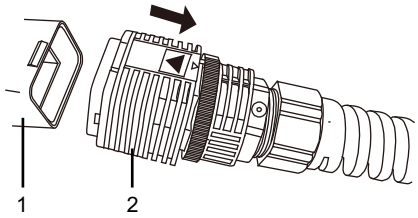 **1** Cable's connector cap **2** Cable connector **NOTE:** To disconnect this cable from the connector cap, be sure to hold the cable connector and pull it out. If you hold other parts of this cable (lock ring, etc.), the cable cannot be disconnected.
2	As illustrated, line up the arrow on this product with the arrow on the cable. Insert the cable connector into the product connector until you hear it click. 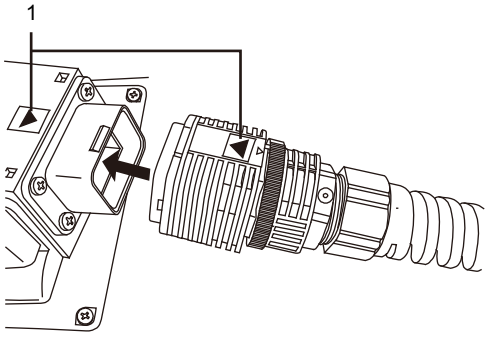 **1** Arrows **NOTE:** Be sure to insert the cable connector as shown.
3	Turn the cable connector lock ring to lock the connector, so that the small arrow (for LOCK) on the lock ring is aligned with the small arrow on the cable connector. 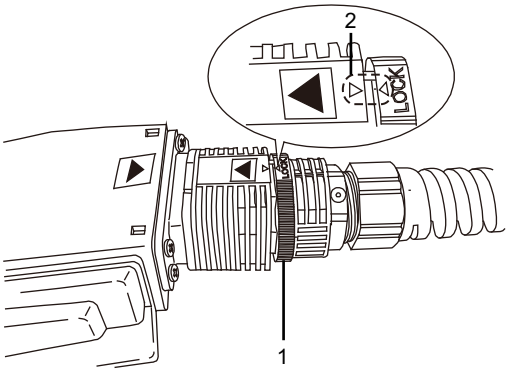 **1** Lock ring **2** Small arrows

Removing the Cable

Step	Action
1	Turn the lock ring so that the small arrow on the lock ring is displaced from the small arrow on the cable connector. Then, pull out the cable by holding the cable connector. 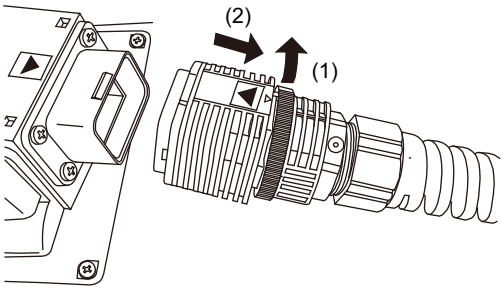 **(1)** Turn the lock ring **(2)** Pull out the cable **NOTE:** To disconnect the cable, be sure to hold the cable connector and pull it out. If you hold other parts of the cable (lock ring, etc.), the cable cannot be disconnected.

NOTE: Whenever the cable is removed, you cover the connector with a connector cover.

Section 6.3
Attaching the Stop Switch Guard

NOTE: When the stop switch guard is attached, the emergency stop switch or the stop switch does not conform to safety standards (EC Machinery Directive IEC60204-1, etc.). If conforming to the safety standards is required, do not use the stop switch guard included with this product.

Step	Action
1	Prepare the stop switch guard and 3 installation screws, included with this product.
2	Remove the stop switch guard hole covers at two places beside the emergency stop switch (or the stop switch). 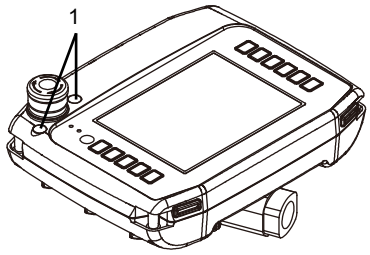 **1** Switch guard hole covers
3	Align the three screw holes of the stop switch guard with the screw holes on this product. Insert and fasten screws in the two holes in the front, and the one in the rear of this product. The necessary torque is 0.5 N•m (4.4 lb-in). 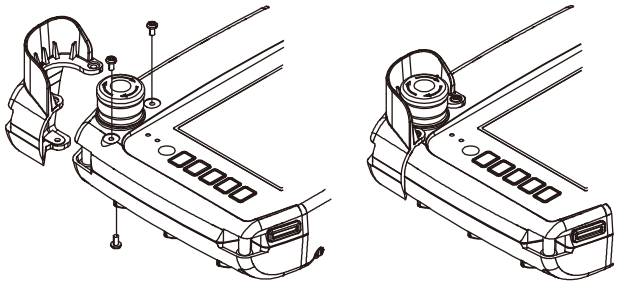

NOTICE
BROKEN ENCLOSURE Do not exert more than 0.5 N•m (4.4 lb-in) of torque when tightening the screws. **Failure to follow these instructions can result in equipment damage.**

Section 6.4
Replacing the Function Switch Sheet

Step	Action
1	Remove the cover of the insertion hole and pull out the current sheet.
2	Insert the new sheet and put the cover back on the insertion hole. 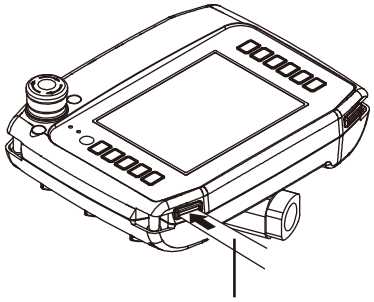 **1** Function switch sheet **NOTE:** ● Insert the cover on the insertion hole all the way in. Failure to do so will reduce the water resistance. ● The cover cannot be pressed into place if the sheet sticks out from the insertion hole. Use a touch pen (included) to push the sheet all the way into this product. ● To simplify insertion of the function switch sheet, bend the edge on the dotted line, as shown. 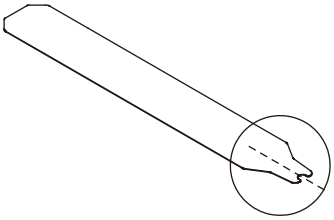

Section 6.5
SD Card Insertion/Removal

What Is in This Section?

This section contains the following topics:

Topic	Page
Introduction	66
Inserting the SD Card	67
Removing the SD Card	68
SD Card Data Backup	70

Introduction

NOTICE

LOSS OF DATA

When using a SD Card:
- Make sure you regularly back up the SD Card data since the SD Card has a life span and accidental data loss can occur at any time.
- While a SD Card is accessed, do not turn OFF or reset this product, and do not remove the SD Card. Doing so could damage the SD Card, or corrupt its data.
- Before removing the SD Card from this product, stop all operations on the SD Card.
- Make sure of the SD Card's orientation before inserting it into the SD Card slot.

Failure to follow these instructions can result in equipment damage.

NOTICE

LOSS OF DATA

When handling the SD Card:
- Avoid storing the SD Card where there is static electricity or electromagnetic waves.
- Avoid storing the SD Card in direct sunlight, near a heater, or other locations where high temperatures can occur.
- Do not bend the SD Card.
- Do not drop or strike the SD Card against another object.
- Keep the SD Card dry.
- Do not touch the SD Card connectors.
- Do not disassemble or modify the SD Card.
- Use only SD Cards formatted using FAT or FAT32. This product does not recognize NTFS formatted SD Cards.

Failure to follow these instructions can result in equipment damage.

Inserting the SD Card

NOTE: As shown in the image below (example on the left-hand side), you can set the Write-Control Tab to prevent write operations to the SD Card. Push the tab up, as shown in the example on the right-hand side, to release the lock and enable writing to the SD Card. Before using a commercial-type SD Card, read the manufacturer's instructions.

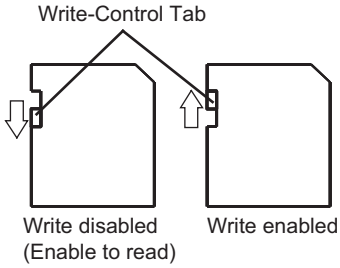

Step	Action
1	Open the Maintenance cover. 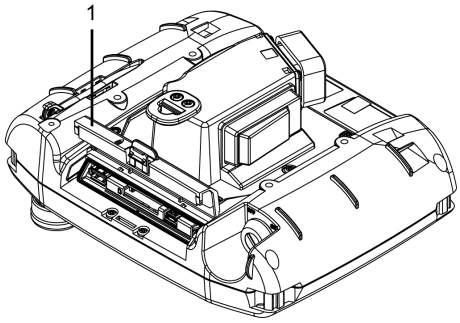 **1** Maintenance cover
2	Insert the SD Card into the SD Card Slot with the front face of the SD Card facing up and push until you hear it "click". 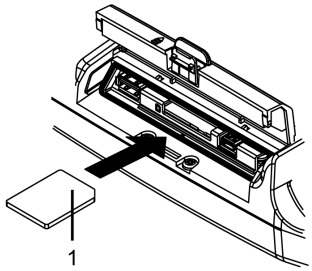 **1** SD Card
3	Close the Maintenance cover.

⚠ CAUTION

RISK OF INJURY

When opening or closing the Maintenance cover, be careful not to injure your fingers.

Failure to follow these instructions can result in injury or equipment damage.

Removing the SD Card

If you remove the SD Card while it is in use, you risk corrupting your data. Before removing the SD Card from this product, stop all operations on the SD Card.

For instructions on removing the SD Card safely, refer to the corresponding topic in the manual of your screen editing software.

Step	Action
1	Make sure the SD Card access LED is off. 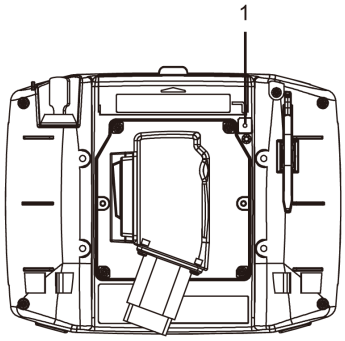 **1** SD Card access LED
2	Open the Maintenance cover. 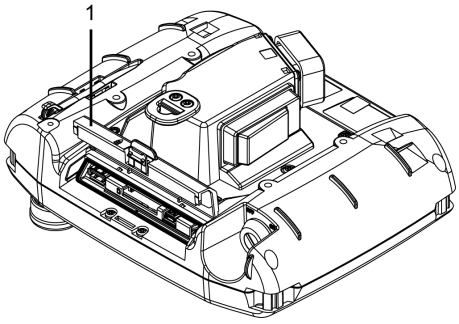 **1** Maintenance cover
3	Push the SD Card once to release, and pull out the card. 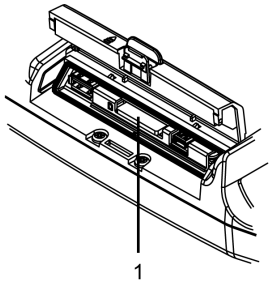 **1** SD Card **NOTE:** After using the SD Card, store the SD Card in its case or other safe location.

Step	Action
4	Close the Maintenance cover.

⚠ CAUTION

RISK OF INJURY

When opening or closing the Maintenance cover, be careful not to injure your fingers.

Failure to follow these instructions can result in injury or equipment damage.

SD Card Data Backup

To make your backups, you can either insert the SD Card directly into the SD Card Slot on your computer, or use a commercially available SD Card reader.

Chapter 7
Maintenance

What Is in This Chapter?

This chapter contains the following topics:

Topic	Page
Regular Cleaning	72
Periodic Check Points	73
Replacing the Backlight	74
After-sales Service	75

Regular Cleaning

Cleaning this product

NOTICE

EQUIPMENT DAMAGE

- Power off this product before cleaning it.
- Do not use hard or pointed objects to operate the touch panel.
- Do not use paint thinner, organic solvents, or a strong acid compound to clean the unit.

Failure to follow these instructions can result in equipment damage.

When this product gets dirty, soak a soft cloth in water with a neutral detergent, wring the cloth tightly and wipe this product.

Periodic Check Points

Operation Environment

- Is the operating temperature within the allowable range? (0...40 °C [32...104 °F])
- Is the operating humidity within the specified range? (10...90% RH, wet bulb temperature of 39 °C [102.2 °F] or less)
- Is the operating atmosphere free of corrosive gases?

When this product is inside a panel, the ambient environment refers to the interior of the panel.

Electrical Specifications

Is the input voltage appropriate? (19.2...28.8 Vdc)

- Are all power cords and cables connected properly? Are there any loose cables?

Unit Disposal

When disposing this product, dispose it in a manner appropriate to, and in accordance with, your country's industrial machinery disposal/recycling standards.

Replacing the Backlight

Not user replaceable. When replacement is required, contact your local distributor.

After-sales Service

Information

For details on after-sales service, refer to our website at

http://www.pro-face.com/trans/en/manual/1001.html

California Proposition 65 Warning—Lead and Lead Compounds
Advertencia de la Proposición 65 de California—Plomo y compuestos de plomo
Avertissement concernant la Proposition 65 de Californie—Plomb et composés de plomb

⚠ **WARNING:** This product can expose you to chemicals including lead and lead compounds, which are known to the State of California to cause cancer and birth defects or other reproductive harm. For more information go to: www.P65Warnings.ca.gov.

⚠ **ADVERTENCIA**: Este producto puede exponerle a químicos incluyendo plomo y compuestos de plomo, que es (son) conocido(s) por el Estado de California como causante(s) de cáncer y defectos de nacimiento u otros daños reproductivos. Para mayor información, visite : www.P65Warnings.ca.gov.

⚠ **AVERTISSEMENT**: Ce produit peut vous exposer à des agents chimiques, y compris plomb et composés de plomb, identifiés par l'État de Californie comme pouvant causer le cancer et des malformations congénitales ou autres troubles de l'appareil reproducteur. Pour de plus amples informations, prière de consulter: www.P65Warnings.ca.gov.

All trademarks are the property of Schneider Electric SE, its subsidiaries, and affiliated companies.

Schneider Electric USA, Inc.
800 Federal Street
Andover, MA 01810 USA
888-778-2733
www.schneider-electric.us

Todas las marcas comerciales son propiedad de Schneider Electric SE, sus filiales y compañías afiliadas.

Importado en México por:
Schneider Electric México, S.A. de C.V.
Av. Ejercito Nacional No. 904
Col. Palmas, Polanco 11560 México, D.F.
55-5804-5000
www.schneider-electric.com.mx

Toutes les marques commerciales sont la propriété de Schneider Electric SE, ses filiales et compagnies affiliées.

Schneider Electric Canada, Inc.
5985 McLaughlin Road
Mississauga, ON L5R 1B8 Canada
800-565-6699
www.schneider-electric.ca

© 2018 Schneider Electric All Rights Reserved / Reservados todos los derechos / Tous droits réservés